Solicitation No.__**RFP96-18**
Contract No._____

THE LIBRARY OF CONGRESS

Requests Proposals For

Digital Images from Original Documents Text Conversion and SGML-Encoding National Digital Library Program

TABLE OF CONTENTS

Contracts AND Logistics Services

PREPROPOSAL CONFERENCE
(See L.5 page L-9)
Date: **Wednesday, June 5, 1996**
Time: **10:00 A.M.**
Place: **Library of Congress**
James Madison Memorial Bldg.
101 Independence Ave., S.E.
Washington, DC

The Library of Congress

Requests for Proposals

Table of Contents

Section	Subject	Pages
A	Solicitation, Offer and Award	A1
B	The Schedule	B1-B36
C	Description/Specification/Work Statement	C1-C37
D	Packaging and Marking	D1
E	Inspection and Acceptance	E1-E4
F	Deliveries or Performance	F1-F5
G	Contract Administration Data	G1-G3
H	Special Contract Requirements	H1-H3
I	Contract Clauses	I1-I10
J	Attachments	J1-J64
K	Representation and Instructions	K1-K17
L	Instructions, Conditions, and Notices to Offerors	L1-L19
M	Evaluation Factor for Award	M1-M3

Return to Table of Contents

SOLICITATION, OFFER AND AWARD

1. THIS CONTRACT IS A RATED ORDER UNDER DPAS (15 CFR 350) ▶ RATING: N/A | PAGE OF: A1 A1 PAGES

2. CONTRACT NO. | 3. SOLICITATION NO.: RFP96-18 | 4. TYPE OF SOLICITATION: [ ] SEALED BID (IFB) [X] NEGOTIATED (RFP) | 5. DATE ISSUED: 05-15-96 | 6. REQUISITION/PURCHASE NO.

7. ISSUED BY: CODE

The Library of Congress
Contracts and Logistics Service
1701 Brightseat Road
Landover, MD 20785

8. ADDRESS OFFER TO (If other than Item 7)

NOTE: In sealed bid solicitations "offer" and "offeror" mean "bid" and "bidder".

SOLICITATION

9. Sealed offers in original and ___ See L.1 copies for furnishing the supplies or services in the Schedule will be received at the place specified in Item 8, or if handcarried, in the depository located in SEE BLOCK 7 until 2:00pm (Hour) local time 07-11-96 (Date)

CAUTION – LATE Submissions, Modifications, and Withdrawals: See Section L, Provision No. 52.214-7 or 52.215-10. All offers are subject to all terms and conditions contained in this solicitation.

10. FOR INFORMATION CALL:	A. NAME	B. TELEPHONE NO. (Include area code) (NO COLLECT CALLS)
	Helen S. Mathura	(202) 707-8609 FAX# (202) 707-8611

11. TABLE OF CONTENTS

(X) SEC.	DESCRIPTION	PAGE(S)	(X) SEC.	DESCRIPTION	PAGE(S)
	PART I – THE SCHEDULE			PART II – CONTRACT CLAUSES	
X	A SOLICITATION/CONTRACT FORM	A1	X	I CONTRACT CLAUSES	I1-10
X	B SUPPLIES OR SERVICES AND PRICES/COSTS	B1-36		PART III – LIST OF DOCUMENTS, EXHIBITS AND OTHER ATTACH.	
X	C DESCRIPTION/SPECS./WORK STATEMENT	C1-S8	X	J LIST OF ATTACHMENTS	J1-64
X	D PACKAGING AND MARKING	D1		PART IV – REPRESENTATIONS AND INSTRUCTIONS	
X	E INSPECTION AND ACCEPTANCE	E1-4		K REPRESENTATIONS, CERTIFICATIONS AND OTHER STATEMENTS OF OFFERORS	K1-17
X	F DELIVERIES OR PERFORMANCE	F1-5	X	L INSTRS., CONDS., AND NOTICES TO OFFERORS	L1-19
X	G CONTRACT ADMINISTRATION DATA	G1-3	X	M EVALUATION FACTORS FOR AWARD	M1-3
X	H SPECIAL CONTRACT REQUIREMENTS	H1-3			

OFFER (Must be fully completed by offeror)

NOTE: Item 12 does not apply if the solicitation includes the provisions at 52.214-16, Minimum Bid Acceptance Period.

12. In compliance with the above, the undersigned agrees, if this offer is accepted within ___ calendar days (60 calendar days unless a different period is inserted by the offeror), from the date for receipt of offers specified above, to furnish any or all items upon which prices are offered at the price set opposite each item, delivered at the designated point(s), within the time specified in the schedule.

13. DISCOUNT FOR PROMPT PAYMENT (See Section I, Clause No. 52.232-8)	10 CALENDAR DAYS %	20 CALENDAR DAYS %	30 CALENDAR DAYS %	CALENDAR DAYS %

14. ACKNOWLEDGMENT OF AMENDMENTS (The offeror acknowledges receipt of amendments to the SOLICITATION for offerors and related documents numbered and dated.)	AMENDMENT NO.	DATE	AMENDMENT NO.	DATE

15A. NAME AND ADDRESS OF OFFEROR	CODE	FACILITY	16. NAME AND TITLE OF PERSON AUTHORIZED TO SIGN OFFER (Type or print)

15B. TELEPHONE NO. (Include area code)	15C. CHECK IF REMITTANCE ADDRESS IS DIFFERENT FROM ABOVE – ENTER SUCH ADDRESS IN SCHEDULE	17. SIGNATURE	18. OFFER DATE
	[ ]		

AWARD (To be completed by Government)

19. ACCEPTED AS TO ITEMS NUMBERED	20. AMOUNT	21. ACCOUNTING AND APPROPRIATION

22. AUTHORITY FOR USING OTHER THAN FULL AND OPEN COMPETITION:

___ 10 U.S.C. 2304(c)( ) [ ] 41 U.S.C. 253(c)( )

23. SUBMIT INVOICES TO ADDRESS SHOWN IN (4 copies unless otherwise specified) ▶	ITEM

24. ADMINISTERED BY (If other than Item 7)	CODE	25. PAYMENT WILL BE MADE BY	CODE

26. NAME OF CONTRACTING OFFICER (Type or print)	27. UNITED STATES OF AMERICA (Signature of Contracting Officer)	28. AWARD DATE

IMPORTANT – Award will be made on this Form, or on Standard Form 26, or by other authorized official written notice.

NSN 7540-01-152-8064
PREVIOUS EDITION NOT USABLE

33-133

STANDARD FORM 33 (REV. 4-85)
Prescribed by GSA
FAR (48 CFR) 53.214(c)

• U.S. GOVERNMENT PRINTING OFFICE: 1990-262-367/20135

Next.. ...Return to Table of Contents

The Library of Congress

Requests for Proposals

Table of Contents

for Section B

SECTION	TITLE	PAGES
B	The Schedule	B1-B36
B	Estimated Quantities Per Year	B1
B	Lot 1 Base Year	B2-B6
B	Lot 1 Option Year 1	B7-B11
B	Lot 1 Option Year 2	B12-B16
B	Lot 1 Option Year 3	B17-B21
B	Lot 1 Option Year 4	B22-B26
B	Lot 2 Base Year 1	B27-B25
B	Lot 2 Option Year 1	B29-B30
B	Lot 2 Option Year 2	B31-B32
B	Lot 2 Option Year 3	B33-B34
B	Lot 2 Option Year 4	B35-B36

Return to Table of Contents

Estimated Quantities Per Year

LOT 1	Year 1			Year 2			Year 3		
	Est. Qty.	Min. Qty.	Max. Qty.	Est. Qty.	Min. Qty.	Max. Qty.	Est. Qty.	Min. Qty.	Max. Qty.
Images	345,368	259,026	518,052	373,136	279,852	559,704	379,415	284,561	569,123
Images per week	6,642	4,981	9,963	7,176	5,382	10,764	7,296	5,472	10,945
Deriv. Images	11,051	8,288	16,577	11,082	8,312	16,623	6,589	4,942	9,884
Images per week	213	159	319	213	160	320	127	95	190
Text (kilochar.)	499,153	374,365	748,730	218,817	164,113	328,226	414,012	310,509	621,018
Kilchar. per week	9,599	7,199	14,399	4,208	3,156	6,312	7,962	5,971	11,943

	Year 4			Year 5			Total		
	Est. Qty.	Min. Qty.	Max. Qty.	Est. Qty.	Min. Qty.	Max. Qty.	Est. Qty.	Min. Qty.	Max. Qty.
Images	390,530	292,898	585,795	362,996	272,247	544,494	1,851,445	1,388,584	2,777,168
Images per week	7,510	5,633	11,265	6,981	5,236	10,471			
Deriv. Images	6,964	5,223	10,446	6,589	4,942	9,884	42,275	31,706	63,413
Images per week	134	100	201	127	95	190			
Text (kilochar.)	324,686	243,515	487,029	324,101	243,076	486,152	1,780,769	1,335,577	2,671,154
Kilchar. per week	6,244	4,683	9,366	6,233	4,675	9,349			

LOT 2	Year 1			Year 2			Year 3		
	Est. Qty.	Min. Qty.	Max. Qty.	Est. Qty.	Min. Qty.	Max. Qty.	Est. Qty.	Min. Qty.	Max. Qty.
Images	3354	2,516	5,031	3666	2,750	5,499	4407	3,305	6,611
Deriv. Images	412	309	618	460	345	690	552	414	828

	Year 4			Year 5			Total		
	Est. Qty.	Min. Qty.	Max. Qty.	Est. Qty.	Min. Qty.	Max. Qty.	Est. Qty.	Min. Qty.	Max. Qty.
Images	4992	3,744	7,488	4446	3,335	6,669	20865	15,649	31,298
Deriv. Images	628	471	942	556	417	834	2608	1,956	3,912

Production rates for LOT 2 will range from 100 images per week to 500 images per week for an active task order.

Next.. ..Previous.. ...Return to Table of Contents

CONTINUATION SHEET - Supplies or Services and Prices/Costs LOT 1- BASE YEAR							
CLIN	TYPE	SIZE	IMAGE SPEC	ON/OFFSITE	QTY	UNIT PRICE	AMOUNT
B.1.	**I. IMAGES OF BOUND MATERIALS**						
01	H1 Bound, open NTE 90 - 130 degrees, can invert	S2 Pages NTE 8 1/2 x14 inches	3B	ON	84,240	$	$
01A				OFF	28,080	$	$
02			4B	ON	176	$	$
02A				OFF	59	$	$
03			3BH	ON	1,404	$	$
03A				OFF	468	$	$
04			4BH	ON	117	$	$
04A				OFF	39	$	$
05			2G	ON	176	$	$
05A				OFF	59	$	$
06			3G	ON	176	$	$
06A				OFF	59	$	$
07	H2 Bound, open NTE 180 degrees, no invert	S1 Pages NTE 8 1/2x11 inches	3B	ON	97,169	$	$
07A				OFF	32,390	$	$
08			4B	ON	176	$	$
08A				OFF	59	$	$
09			3BH	ON	2,750	$	$
09A				OFF	917	$	$
10			4BH	ON	117	$	$
10A				OFF	39	$	$
11			2G	ON	176	$	$
11A				ON	59	$	$
12			3G	OFF	234	$	$
12A				ON	78	$	$
13	H3 Bound, open NTE 90 - 130 degrees, no	S1 Pages NTE 81/2x11 inches	3B	ON	73,648	$	$
14			4B	ON	156	$	$
15			3BH	ON	1,950	$	$
16			4BH	ON	156	$	$

17	invert, use wedge or cradle		2G	ON	296	$	$
18			3G	ON	608	$	$

CONTINUATION SHEET - Supplies or Services and Prices/Costs LOT 1 - BASE YEAR

CLIN	TYPE	SIZE	IMAGE SPEC	ON/OFF SITE	QTY	UNIT PRICE	AMOUNT
B.2	**II. UNBOUND MATERIALS**						
01	H6 Typical unbound materials	S4 Pages NTE 81/2x14 inches	3B	ON	2,769	$	$
02			4B	ON	148	$	$
03			3BH	ON	8	$	$
04			4BH	ON	8	$	$
05			2G	ON	242	$	$
06			3G	ON	4,446	$	$
07			2C	ON	8	$	$
08			3C	ON	936	$	$
09	H6 Typical unbound materials	S5 ON Pages NTE 11x17 inches	3B	ON	2,660	$	$
10			4B	ON	148	$	$
11			3BH	ON	8	$	$
12			4BH	ON	8	$	$
13			2G	ON	710	$	$
14			3G	ON	507	$	$
15			2C	ON	8	$	$
16			3C	ON	1,560	$	$
17	H7 Especially fragile unbound material	S4 Pages NTE 81/2x14 inches	3B	ON	390	$	$
18			4B	ON	62	$	$
19			3BH	ON	8	$	$
20			4BH	ON	8	$	$
21			2G	ON	312	$	$
22			3G	ON	1,014	$	$
23			2C	ON	468	$	$
24			3C	ON	702	$	$

CONTINUATION SHEET - Supplies or Services and Prices/Costs LOT 1 - BASE YEAR

CLIN	TYPE	SIZE	IMAGE SPEC	ON/OFF SITE	QTY	UNIT PRICE	AMOUNT
B.2	**II. UNBOUND MATERIALS (CONTINUED)**						
25	H7 Especially fragile unbound materials	S5 Pages NTE 11x17	3B	ON	62	$	$
26			4B	ON	62	$	$
27			3BH	ON	62	$	$
28			4BH	ON	62	$	$
29			2G	ON	62	$	$
30			3G	ON	62	$	$
31			2C	ON	62	$	$
32			3C	ON	62	$	$
33	H8 Unbound folded sheets (capture of one half at a time)	S4 Single page NTE 11x17 inches (full sheet NTE 22x17 inches)	3B	ON	452	$	$
34			4B	ON	203	$	$
35			3BH	ON	8	$	$
36			4BH	ON	8	$	$
37			2G	ON	187	$	$
38			3G	ON	62	$	$
39			2C	ON	8	$	$
40			3C	ON	62	$	$
41	H9 Large sheets or foldouts (removed from books) captured in segments, special handling required, (cost per segment)	S6 Full sheet NTE 36x24 inches; segments approx 8.5x11 inches	3B	ON	304	$	$
42			3BH	ON	8	$	$
43			3G	ON	281	$	$
44			3C	ON	125	$	$

CONTINUATION SHEET - Supplies or Services and Prices/CostsLOT 1 - BASE YEAR

CLIN	TYPE	SIZE	IMAGE SPEC	ON/OFF SITE	QTY	UNIT PRICE	AMOUNT
B.3	**III. DERIVATIVE IMAGES**						

01	From a grayscale or color source image, produce a 300 dpi bitonal image at the same spatial resolution as the source image	Decompressed source file, NTE 10 MB	3DB	n/a	2,466	$	$
02		Decompressed source file, NTE 20 MB	3DB	n/a	2,466	$	$
03		Decompressed source file, NTE 30 MB	3DB	n/a	2,466	$	$
04		Decompressed source file, NTE 30-60 MB	3DB	n/a	2,466	$	$
05	From the already scanned image of a large sheet or page (NTE 11x17 inches), produce a set of segments NTE 8.5x11 inches with same spatial and tonal resolution as the source image	Decompressed source file, NTE 10 MB	n/a	n/a	296	$	$
06		Decompressed source file, NTE 20 MB	n/a	n/a	296	$	
07		Decompressed source file, NTE 30 MB	n/a	n/a	296	$	$
08		Decompressed source file, NTE 30-60 MB	n/a	n/a	296	$	$

CONTINUATION SHEET LOT 1 - BASE YEAR

CLIN	Supplies or Services and Prices/Costs	UNIT	QTY	UNIT PRICE	AMOUNT
B.4	**IV. TEXT CONVERSION AND SGML ENCODING (At either 99.95% or 99.995% Accuracy - See C.14.8)**				
01	Conversion and SGML encoding at **99.95**% accuracy including associated files	1,000 characters	499,153	$	$
01A	**OPTION TO BE EXERCISED AT TIME OF AWARD** Conversion and SGML encoding at **99.995**% accuracy including associated files	1,000 characters	499,153	$	$
B.5	**V. ADDITIONAL RELATED SERVICES AND ACTIVITIES**				

01	Photocopying of Source Material		PAGE	4,126	$	$
02	Printed Copies of Scanned Images	Black & White Hardcopy	PAGE	500	$	$
03		Grayscale Hardcopy	PAGE	100	$	$
04		Color Hardcopy	PAGE	100	$	$
05	Programming and Processing Activities	Technician	HR	100	$	$
06		Programmer	HR	75	$	$
07		Project Leader	HR	50	$	$
08	**CONTRACT STARTUP/TESTING (ONE-TIME FIRM -FIXED PRICE) C.13**			1 LOT	$	$
TOTAL COST - LOT 1 (BASE REQUIREMENT) YEAR 1						$

AWARD BY LOT - Items have been grouped together by LOT for purposes of award by LOT. Award will not be made by item. Lots will not be split for purposes of award. This solicitation contains two (2) Lots. Vendors may offer for one or both lots. Schedule of prices for LOT 1 (pages B-2 through B-25); LOT 2 (pages B-26 through B-35)

FIRM-FIXED UNIT PRICE, IDIQ CONTRACT - The quantities and hours as specified for the base year (1) and all option years (4) are estimated for evaluation purposes only and do not represent a ceiling. The minimum and maximum quantities to be ordered: minimum = 75 percent of the estimated yearly total quantities -- maximum = 50 percent more that the estimated yearly quantities. (See page B-1 and I.4, 52.216-19, Order Limitations, Section I)

HOURLY LABOR RATES - Services to be provided under CLINs B.5.05, 5.06, and 5.07 shall be fully loaded to include all overhead, G&A, and profit.

Next.....Previous.....Return to Section B Table of Contents.....Return to the Table of Contents

CONTINUATION SHEET - Supplies or Services and Prices/Costs LOT 1- OPTION YEAR							
CLIN	**TYPE**	**SIZE**	**IMAGE SPEC**	**ON/OFFSITE**	**QTY**	**UNIT PRICE**	**AMOUNT**
B.1.	**I. IMAGES OF BOUND MATERIALS**						
01	H1 Bound, open NTE 90 - 130 degrees, can invert	S2 Pages NTE 8 1/2 x14 inches	3B	ON	84,240	$	$
01A				OFF	28,080	$	$
02			4B	ON	176	$	$
02A				OFF	59	$	$
03			3BH	ON	1,404	$	$
03A				OFF	468	$	$
04			4BH	ON	117	$	$
04A				OFF	39	$	$
05			2G	ON	176	$	$
05A				OFF	59	$	$
06			3G	ON	176	$	$
06A				OFF	59	$	$
07	H2 Bound, open NTE 180 degrees, no invert	S1 Pages NTE 8 1/2x11 inches	3B	ON	97,315	$	$
07A				OFF	32,438	$	$
08			4B	ON	176	$	$
08A				OFF	59	$	$
09			3BH	ON	2,779	$	$
09A				OFF	926	$	$
10			4BH	ON	117	$	$
10A				OFF	39	$	$
11			2G	ON	176	$	$
11A				ON	59	$	$
12			3G	OFF	263	$	$
12A				ON	88	$	$
13	H3 Bound, open NTE 90 - 130 degrees, no	S1 Pages NTE 81/2x11 inches	3B	ON	73,710	$	$
14			4B	ON	156	$	$
15			3BH	ON	1,989	$	$
16			4BH	ON	367	$	$

17	invert, use wedge or cradle		2G	ON	296	$	$
18			3G	ON	421	$	$

CONTINUATION SHEET - Supplies or Services and Prices/Costs LOT 1 - OPTION YEAR

CLIN	TYPE	SIZE	IMAGE SPEC	ON/OFF SITE	QTY	UNIT PRICE	AMOUNT
B.2	**II. UNBOUND MATERIALS**						
01	H6 Typical unbound materials	S4 Pages NTE 81/2x14 inches	3B	ON	15,249	$	$
02			4B	ON	11,185	$	$
03			3BH	ON	8	$	$
04			4BH	ON	8	$	$
05			2G	ON	242	$	$
06			3G	ON	5,109	$	$
07			2C	ON	8	$	$
08			3C	ON	1,014	$	$
09	H6 Typical unbound materials	S5 ON Pages NTE 11x17 inches	3B	ON	4,142	$	$
10			4B	ON	195	$	$
11			3BH	ON	8	$	$
12			4BH	ON	8	$	$
13			2G	ON	905	$	$
14			3G	ON	546	$	$
15			2C	ON	8	$	$
16			3C	ON	1,755	$	$
17	H7 Especially fragile unbound material	S4 Pages NTE 81/2x14 inches	3B	ON	585	$	$
18			4B	ON	70	$	$
19			3BH	ON	8	$	$
20			4BH	ON	8	$	$
21			2G	ON	312	$	$
22			3G	ON	1,248	$	$
23			2C	ON	546	$	$
24			3C	ON	780	$	$

CONTINUATION SHEET - Supplies or Services and Prices/Costs LOT 1 - OPTION YEAR

CLIN	TYPE	SIZE	IMAGE SPEC	ON/OFF SITE	QTY	UNIT PRICE	AMOUNT
B.2	**II. UNBOUND MATERIALS (CONTINUED)**						
25	H7 Especially fragile unbound materials	S5 Pages NTE 11x17	3B	ON	62	$	$
26			4B	ON	62	$	$
27			3BH	ON	62	$	$
28			4BH	ON	62	$	$
29			2G	ON	62	$	$
30			3G	ON	62	$	$
31			2C	ON	62	$	$
32			3C	ON	62	$	$
33	H8 Unbound folded sheets (capture of one half at a time)	S4 Single page NTE 11x17 inches (full sheet NTE 22x17 inches)	3B	ON	655	$	$
34			4B	ON	257	$	$
35			3BH	ON	8	$	$
36			4BH	ON	8	$	$
37			2G	ON	187	$	$
38			3G	ON	70	$	$
39			2C	ON	8	$	$
40			3C	ON	70	$	$
41	H9 Large sheets or foldouts (removed from books) captured in segments, special handling required, (cost per segment)	S6 Full sheet NTE 36x24 inches; segments approx 8.5x11 inches	3B	ON	577	$	$
42			3BH	ON	8	$	$
43			3G	ON	289	$	$
44			3C	ON	133	$	$

CONTINUATION SHEET - Supplies or Services and Prices/Costs LOT 1 - OPTION YEAR

CLIN	TYPE	SIZE	IMAGE SPEC	ON/OFF SITE	QTY	UNIT PRICE	AMOUNT
B.3	**III. DERIVATIVE IMAGES**						

01	From a grayscale or color source image, produce a 300 dpi bitonal image at the same spatial resolution as the source image	Decompressed source file, NTE 10 MB	3DB	n/a	2,466	$	$
02		Decompressed source file, NTE 20 MB	3DB	n/a	2,466	$	$
03		Decompressed source file, NTE 30 MB	3DB	n/a	2,466	$	$
04		Decompressed source file, NTE 30-60 MB	3DB	n/a	2,466	$	$
05	From the already scanned image of a large sheet or page (NTE 11x17 inches), produce a set of segments NTE 8.5x11 inches with same spatial and tonal resolution as the source image	Decompressed source file, NTE 10 MB	n/a	n/a	304	$	$
06		Decompressed source file, NTE 20 MB	n/a	n/a	304	$	
07		Decompressed source file, NTE 30 MB	n/a	n/a	304	$	$
08		Decompressed source file, NTE 30-60 MB	n/a	n/a	304	$	$

CONTINUATION SHEET LOT 1 - OPTION YEAR					
CLIN	**Supplies or Services and Prices/Costs**	**UNIT**	**QTY**	**UNIT PRICE**	**AMOUNT**
B.4	**IV. TEXT CONVERSION AND SGML ENCODING (At either 99.95% or 99.995% Accuracy - See C.14.8)**				
01	Conversion and SGML encoding at **99.95**% accuracy including associated files	1,000 characters	218,817	$	$
01A	**OPTION TO BE EXERCISED AT TIME OF AWARD** Conversion and SGML encoding at **99.995**% accuracy including associated files	1,000 characters	218,817	$	$
B.5	**V. ADDITIONAL RELATED SERVICES AND ACTIVITIES**				

01	Photocopying of Source Material		PAGE	4,391	$	$
02	Printed Copies of Scanned Images	Black & White Hardcopy	PAGE	500	$	$
03		Grayscale Hardcopy	PAGE	100	$	$
04		Color Hardcopy	PAGE	100	$	$
05	Programming and Processing Activities	Technician	HR	100	$	$
06		Programmer	HR	75	$	$
07		Project Leader	HR	50	$	$
TOTAL COST - LOT 1 (OPTION YEAR 1) YEAR 2						$

Next.....Previous....Return to Section B Table of Contents.....Return to the Table of Contents

CONTINUATION SHEET - Supplies or Services and Prices/Costs LOT 1- OPTION YEAR 2							
CLIN	**TYPE**	**SIZE**	**IMAGE SPEC**	**ON/OFFSITE**	**QTY**	**UNIT PRICE**	**AMOUNT**
B.1.	**I. IMAGES OF BOUND MATERIALS**						
01	H1 Bound, open NTE 90 - 130 degrees, can invert	S2 Pages NTE 8 1/2 x14 inches	3B	ON	84,825	$	$
01A				OFF	28,275	$	$
02			4B	ON	219	$	$
02A				OFF	73	$	$
03			3BH	ON	1,463	$	$
03A				OFF	488	$	$
04			4BH	ON	146	$	$
04A				OFF	49	$	$
05			2G	ON	219	$	$
05A				OFF	73	$	$
06			3G	ON	219	$	$
06A				OFF	73	$	$
07	H2 Bound, open NTE 180 degrees, no invert	S1 Pages NTE 8 1/2x11 inches	3B	ON	98,134	$	$
07A				OFF	32,711	$	$
08			4B	ON	219	$	$
08A				OFF	73	$	$
09			3BH	ON	2,867	$	$
09A				OFF	956	$	$
10			4BH	ON	146	$	$
10A				OFF	49	$	$
11			2G	ON	219	$	$
11A				ON	73	$	$
12			3G	OFF	307	$	$
12A				ON	102	$	$
13	H3 Bound, open NTE 90 - 130 degrees, no	S1 Pages NTE 81/2x11 inches	3B	ON	74,296	$	$
14			4B	ON	429	$	$
15			3BH	ON	2,067	$	$
16			4BH	ON	195	$	$

17	invert, use wedge or cradle		2G	ON	317	$	$
18			3G	ON	761	$	$

CONTINUATION SHEET - Supplies or Services and Prices/Costs LOT 1 - OPTION YEAR 2

CLIN	TYPE	SIZE	IMAGE SPEC	ON/OFF SITE	QTY	UNIT PRICE	AMOUNT
B.2	**II. UNBOUND MATERIALS**						
01	H6 Typical unbound materials	S4 Pages NTE 81/2x14 inches	3B	ON	15,990	$	$
02			4B	ON	10,741	$	$
03			3BH	ON	16	$	$
04			4BH	ON	16	$	$
05			2G	ON	390	$	$
06			3G	ON	5,889	$	$
07			2C	ON	16	$	$
08			3C	ON	1,170	$	$
09	H6 Typical unbound materials	S5 ON Pages NTE 11x17 inches	3B	ON	4,189	$	$
10			4B	ON	211	$	$
11			3BH	ON	8	$	$
12			4BH	ON	8	$	$
13			2G	ON	991	$	$
14			3G	ON	640	$	$
15			2C	ON	8	$	$
16			3C	ON	1,950	$	$
17	H7 Especially fragile unbound material	S4 Pages NTE 81/2x14 inches	3B	ON	585	$	$
18			4B	ON	78	$	$
19			3BH	ON	8	$	$
20			4BH	ON	8	$	$
21			2G	ON	390	$	$
22			3G	ON	1,365	$	$
23			2C	ON	624	$	$
24			3C	ON	897	$	$

CONTINUATION SHEET - Supplies or Services and Prices/Costs LOT 1 - OPTION YEAR 2

CLIN	TYPE	SIZE	IMAGE SPEC	ON/OFF SITE	QTY	UNIT PRICE	AMOUNT
B.2	**II. UNBOUND MATERIALS (CONTINUED)**						
25	H7 Especially fragile unbound materials	S5 Pages NTE 11x17	3B	ON	78	$	$
26			4B	ON	78	$	$
27			3BH	ON	78	$	$
28			4BH	ON	78	$	$
29			2G	ON	78	$	$
30			3G	ON	78	$	$
31			2C	ON	78	$	$
32			3C	ON	78	$	$
33	H8 Unbound folded sheets (capture of one half at a time)	S4 Single page NTE 11x17 inches (full sheet NTE 22x17 inches)	3B	ON	663	$	$
34			4B	ON	273	$	$
35			3BH	ON	8	$	$
36			4BH	ON	8	$	$
37			2G	ON	234	$	$
38			3G	ON	78	$	$
39			2C	ON	8	$	$
40			3C	ON	78	$	$
41	H9 Large sheets or foldouts (removed from books) captured in segments, special handling required, (cost per segment)	S6 Full sheet NTE 36x24 inches; segments approx 8.5x11 inches	3B	ON	640	$	$
42			3BH	ON	16	$	$
43			3G	ON	351	$	$
44			3C	ON	156	$	$

CONTINUATION SHEET - Supplies or Services and Prices/Costs LOT 1 - OPTION YEAR 2

CLIN	TYPE	SIZE	IMAGE SPEC	ON/OFF SITE	QTY	UNIT PRICE	AMOUNT
B.3	**III. DERIVATIVE IMAGES**						

01	From a grayscale or color source image, produce a 300 dpi bitonal image at the same spatial resolution as the source image	Decompressed source file, NTE 10 MB	3DB	n/a	1,406	$	$
02		Decompressed source file, NTE 20 MB	3DB	n/a	1,406	$	$
03		Decompressed source file, NTE 30 MB	3DB	n/a	1,406	$	$
04		Decompressed source file, NTE 30-60 MB	3DB	n/a	1,406	$	$
05	From the already scanned image of a large sheet or page (NTE 11x17 inches), produce a set of segments NTE 8.5x11 inches with same spatial and tonal resolution as the source image	Decompressed source file, NTE 10 MB	n/a	n/a	242	$	$
06		Decompressed source file, NTE 20 MB	n/a	n/a	242	$	$
07		Decompressed source file, NTE 30 MB	n/a	n/a	242	$	$
08		Decompressed source file, NTE 30-60 MB	n/a	n/a	242	$	$

CONTINUATION SHEET LOT 1 - OPTION YEAR 2

CLIN	Supplies or Services and Prices/Costs	UNIT	QTY	UNIT PRICE	AMOUNT
B.4	**IV. TEXT CONVERSION AND SGML ENCODING (At either 99.95% or 99.995% Accuracy - See C.14.8)**				
01	Conversion and SGML encoding at **99.95**% accuracy including associated files	1,000 characters	414,012	$	$
01A	**OPTION TO BE EXERCISED AT TIME OF AWARD** Conversion and SGML encoding at **99.995**% accuracy including associated files	1,000 characters	414,012	$	$
B.5	**V. ADDITIONAL RELATED SERVICES AND ACTIVITIES**				
01	Photocopying of Source Material	PAGE	4,618	$	$

02	Printed Copies of Scanned Images	Black & White Hardcopy	PAGE	675	$	$
03		Grayscale Hardcopy	PAGE	100	$	$
04		Color Hardcopy	PAGE	100	$	$
05	Programming and Processing Activities	Technician	HR	100	$	$
06		Programmer	HR	75	$	$
07		Project Leader	HR	50	$	$
TOTAL COST - LOT 1 (OPTION YEAR 2) YEAR 3						$

Next.....Previous.....Return to Section B Table of Contents.....Return to the Table of Contents

CONTINUATION SHEET - Supplies or Services and Prices/Costs LOT 1- OPTION YEAR 3							
CLIN	**TYPE**	**SIZE**	**IMAGE SPEC**	**ON/OFFSITE**	**QTY**	**UNIT PRICE**	**AMOUNT**
B.1.	**I. IMAGES OF BOUND MATERIALS**						
01	H1 Bound, open NTE 90 - 130 degrees, can invert	S2 Pages NTE 8 1/2 x14 inches	3B	ON	85,410	$	$
01A				OFF	28,470	$	$
02			4B	ON	263	$	$
02A				OFF	88	$	$
03			3BH	ON	1,521	$	$
03A				OFF	507	$	$
04			4BH	ON	176	$	$
04A				OFF	59	$	$
05			2G	ON	263	$	$
05A				OFF	88	$	$
06			3G	ON	263	$	$
06A				OFF	88	$	$
07	H2 Bound, open NTE 180 degrees, no invert	S1 Pages NTE 8 1/2x11 inches	3B	ON	99,099	$	$
07A				OFF	33,033	$	$
08			4B	ON	263	$	$
08A				OFF	88	$	$
09			3BH	ON	2,984	$	$
09A				OFF	995	$	$
10			4BH	ON	176	$	$
10A				OFF	59	$	$
11			2G	ON	263	$	$
11A				ON	88	$	$
12			3G	OFF	380	$	$
12A				ON	127	$	$
13	H3 Bound, open NTE 90 - 130 degrees, no	S1 Pages NTE 81/2x11 inches	3B	ON	75,114	$	$
14			4B	ON	468	$	$
15			3BH	ON	2,184	$	$
16			4BH	ON	234	$	$

17	invert, use wedge or cradle		2G	ON	429	$	$
18			3G	ON	819	$	$

CONTINUATION SHEET - Supplies or Services and Prices/Costs LOT 1 - OPTION YEAR 3

CLIN	TYPE	SIZE	IMAGE SPEC	ON/OFF SITE	QTY	UNIT PRICE	AMOUNT
B.2	**II. UNBOUND MATERIALS**						
01	H6 Typical unbound materials	S4 Pages NTE 81/2x14 inches	3B	ON	18,720	$	$
02			4B	ON	12,535	$	$
03			3BH	ON	16	$	$
04			4BH	ON	16	$	$
05			2G	ON	390	$	$
06			3G	ON	6,123	$	$
07			2C	ON	16	$	$
08			3C	ON	1,170	$	$
09	H6 Typical unbound materials	S5 Pages NTE 11x17 inches	3B	ON	5,515	$	$
10			4B	ON	250	$	$
11			3BH	ON	8	$	$
12			4BH	ON	8	$	$
13			2G	ON	1,186	$	$
14			3G	ON	640	$	$
15			2C	ON	8	$	$
16			3C	ON	1,950	$	$
17	H7 Especially fragile unbound material	S4 Pages NTE 81/2x14 inches	3B	ON	780	$	$
18			4B	ON	78	$	$
19			3BH	ON	8	$	$
20			4BH	ON	8	$	$
21			2G	ON	390	$	$
22			3G	ON	1,560	$	$
23			2C	ON	702	$	$
24			3C	ON	936	$	$

CONTINUATION SHEET - Supplies or Services and Prices/Costs LOT 1 - OPTION YEAR 3

CLIN	TYPE	SIZE	IMAGE SPEC	ON/OFF SITE	QTY	UNIT PRICE	AMOUNT
B.2	**II. UNBOUND MATERIALS (CONTINUED)**						
25	H7 Especially fragile unbound materials	S5 Pages NTE 11x17	3B	ON	78	$	$
26			4B	ON	78	$	$
27			3BH	ON	78	$	$
28			4BH	ON	78	$	$
29			2G	ON	78	$	$
30			3G	ON	78	$	$
31			2C	ON	78	$	$
32			3C	ON	78	$	$
33	H8 Unbound folded sheets (capture of one half at a time)	S4 Single page NTE 11x17 inches (full sheet NTE 22x17 inches)	3B	ON	858	$	$
34			4B	ON	312	$	$
35			3BH	ON	8	$	$
36			4BH	ON	8	$	$
37			2G	ON	234	$	$
38			3G	ON	78	$	$
39			2C	ON	8	$	$
40			3C	ON	78	$	$
41	H9 Large sheets or foldouts (removed from books) captured in segments, special handling required, (cost per segment)	S6 Full sheet NTE 36x24 inches; segments approx 8.5x11 inches	3B	ON	757	$	$
42			3BH	ON	16	$	$
43			3G	ON	390	$	$
44			3C	ON	156	$	$

CONTINUATION SHEET - Supplies or Services and Prices/Costs LOT 1 - OPTION YEAR 3

CLIN	TYPE	SIZE	IMAGE SPEC	ON/OFF SITE	QTY	UNIT PRICE	AMOUNT
B.3	**III. DERIVATIVE IMAGES**						

01	From a grayscale or color source image, produce a 300 dpi bitonal image at the same spatial resolution as the source image	Decompressed source file, NTE 10 MB	3DB	n/a	1,406	$	$
02		Decompressed source file, NTE 20 MB	3DB	n/a	1,406	$	$
03		Decompressed source file, NTE 30 MB	3DB	n/a	1,406	$	$
04		Decompressed source file, NTE 30-60 MB	3DB	n/a	1,406	$	$
05	From the already scanned image of a large sheet or page (NTE 11x17 inches), produce a set of segments NTE 8.5x11 inches with same spatial and tonal resolution as the source image	Decompressed source file, NTE 10 MB	n/a	n/a	242	$	$
06		Decompressed source file, NTE 20 MB	n/a	n/a	367	$	
07		Decompressed source file, NTE 30 MB	n/a	n/a	367	$	$
08		Decompressed source file, NTE 30-60 MB	n/a	n/a	367	$	$

CONTINUATION SHEET LOT 1 - OPTION YEAR 3

CLIN	Supplies or Services and Prices/Costs	UNIT	QTY	UNIT PRICE	AMOUNT
B.4	**IV. TEXT CONVERSION AND SGML ENCODING (At either 99.95% or 99.995% Accuracy - See C.14.8)**				
01	Conversion and SGML encoding at **99.95**% accuracy including associated files	1,000 characters	234,686	$	$
01A	**OPTION TO BE EXERCISED AT TIME OF AWARD** Conversion and SGML encoding at **99.995**% accuracy including associated files	1,000 characters	234,686	$	$
B.5	**V. ADDITIONAL RELATED SERVICES AND ACTIVITIES**				
01	Photocopying of Source Material	PAGE	4,891	$	$

02	Printed Copies of Scanned Images	Black & White Hardcopy	PAGE	900	$	$
03		Grayscale Hardcopy	PAGE	150	$	$
04		Color Hardcopy	PAGE	150	$	$
05	Programming and Processing Activities	Technician	HR	100	$	$
06		Programmer	HR	75	$	$
07		Project Leader	HR	50	$	$
TOTAL COST - LOT 1 (OPTION YEAR 3) YEAR 4						$

Next.....Previous.....Return to Section B Table of Contents.....Return to the Table of Contents

CONTINUATION SHEET - Supplies or Services and Prices/Costs LOT 1- OPTION YEAR 4							
CLIN	**TYPE**	**SIZE**	**IMAGE SPEC**	**ON/OFFSITE**	**QTY**	**UNIT PRICE**	**AMOUNT**
B.1.	**I. IMAGES OF BOUND MATERIALS**						
01	H1 Bound, open NTE 90 - 130 degrees, can invert	S2 Pages NTE 8 1/2 x14 inches	3B	ON	85,410	$	$
01A				OFF	28,470	$	$
02			4B	ON	263	$	$
02A				OFF	88	$	$
03			3BH	ON	1,521	$	$
03A				OFF	507	$	$
04			4BH	ON	176	$	$
04A				OFF	59	$	$
05			2G	ON	263	$	$
05A				OFF	88	$	$
06			3G	ON	263	$	$
06A				OFF	88	$	$
07	H2 Bound, open NTE 180 degrees, no invert	S1 Pages NTE 8 1/2x11 inches	3B	ON	99,099	$	$
07A				OFF	33,033	$	$
08			4B	ON	263	$	$
08A				OFF	88	$	$
09			3BH	ON	2,984	$	$
09A				OFF	995	$	$
10			4BH	ON	176	$	$
10A				OFF	59	$	$
11			2G	ON	263	$	$
11A				ON	88	$	$
12			3G	OFF	380	$	$
12A				ON	127	$	$
13	H3 Bound, open NTE 90 - 130 degrees, no invert, use	S1 Pages NTE 81/2x11 inches	3B	ON	75,114	$	$
14			4B	ON	468	$	$
15			3BH	ON	2,184	$	$
16			4BH	ON	234	$	$

17	wedge or cradle		2G	ON	429	$	$
18			3G	ON	819	$	$

CONTINUATION SHEET - Supplies or Services and Prices/Costs LOT 1 - OPTION YEAR 4

CLIN	TYPE	SIZE	IMAGE SPEC	ON/OFF SITE	QTY	UNIT PRICE	AMOUNT
B.2	**II. UNBOUND MATERIALS**						
01	H6 Typical unbound materials	S4 Pages NTE 81/2x14 inches	3B	ON	4,485	$	$
02			4B	ON	242	$	$
03			3BH	ON	8	$	$
04			4BH	ON	8	$	$
05			2G	ON	273	$	$
06			3G	ON	5,850	$	$
07			2C	ON	8	$	$
08			3C	ON	1,170	$	$
09	H6 Typical unbound materials	S5 Pages NTE 11x17 inches	3B	ON	5,234	$	$
10			4B	ON	243	$	$
11			3BH	ON	8	$	$
12			4BH	ON	8	$	$
13			2G	ON	1,178	$	$
14			3G	ON	632	$	$
15			2C	ON	8	$	$
16			3C	ON	1,950	$	$
17	H7 Especially fragile unbound material	S4 Pages NTE 81/2x14 inches	3B	ON	780	$	$
18			4B	ON	78	$	$
19			3BH	ON	8	$	$
20			4BH	ON	8	$	$
21			2G	ON	390	$	$
22			3G	ON	1,560	$	$
23			2C	ON	702	$	$
24			3C	ON	936	$	$

CONTINUATION SHEET - Supplies or Services and Prices/Costs LOT 1 - OPTION YEAR 4

CLIN	TYPE	SIZE	IMAGE SPEC	ON/OFF SITE	QTY	UNIT PRICE	AMOUNT
B.2	**II. UNBOUND MATERIALS (CONTINUED)**						
25	H7 Especially fragile unbound materials	S5 Pages NTE 11x17	3B	ON	78	$	$
26			4B	ON	78	$	$
27			3BH	ON	78	$	$
28			4BH	ON	78	$	$
29			2G	ON	78	$	$
30			3G	ON	78	$	$
31			2C	ON	78	$	$
32			3C	ON	78	$	$
33	H8 Unbound folded sheets (capture of one half at a time)	S4 Single page NTE 11x17 inches (full sheet NTE 22x17 inches)	3B	ON	858	$	$
34			4B	ON	312	$	$
35			3BH	ON	8	$	$
36			4BH	ON	8	$	$
37			2G	ON	234	$	$
38			3G	ON	78	$	$
39			2C	ON	8	$	$
40			3C	ON	78	$	$
41	H9 Large sheets or foldouts (removed from books) captured in segments, special handling required, (cost per segment)	S6 Full sheet NTE 36x24 inches; segments approx 8.5x11 inches	3B	ON	476	$	$
42			3BH	ON	8	$	$
43			3G	ON	390	$	$
44			3C	ON	156	$	$

CONTINUATION SHEET - Supplies or Services and Prices/Costs LOT 1 - OPTION YEAR 4

CLIN	TYPE	SIZE	IMAGE SPEC	ON/OFF SITE	QTY	UNIT PRICE	AMOUNT
B.3	**III. DERIVATIVE IMAGES**						

01	From a grayscale or color source image, produce a 300 dpi bitonal image at the same spatial resolution as the source image	Decompressed source file, NTE 10 MB	3DB	n/a	1,406	$	$
02		Decompressed source file, NTE 20 MB	3DB	n/a	1,406	$	$
03		Decompressed source file, NTE 30 MB	3DB	n/a	1,406	$	$
04		Decompressed source file, NTE 30-60 MB	3DB	n/a	1,406	$	$
05	From the already scanned image of a large sheet or page (NTE 11x17 inches), produce a set of segments NTE 8.5x11 inches with same spatial and tonal resolution as the source image	Decompressed source file, NTE 10 MB	n/a	n/a	242	$	$
06		Decompressed source file, NTE 20 MB	n/a	n/a	242	$	
07		Decompressed source file, NTE 30 MB	n/a	n/a	242	$	$
08		Decompressed source file, NTE 30-60 MB	n/a	n/a	242	$	$

CONTINUATION SHEET LOT 1 - OPTION YEAR 4

CLIN	Supplies or Services and Prices/Costs	UNIT	QTY	UNIT PRICE	AMOUNT
B.4	**IV. TEXT CONVERSION AND SGML ENCODING (At either 99.95% or 99.995% Accuracy - See C.14.8)**				
01	Conversion and SGML encoding at **99.95**% accuracy including associated files	1,000 characters	234,101	$	$
01A	**OPTION TO BE EXERCISED AT TIME OF AWARD** Conversion and SGML encoding at **99.995**% accuracy including associated files	1,000 characters	234,101	$	$

B.5	**V. ADDITIONAL RELATED SERVICES AND ACTIVITIES**					
01	Photocopying of Source Material		PAGE	4,891	$	$
02	Printed Copies of Scanned Images	Black & White Hardcopy	PAGE	900	$	$
03		Grayscale Hardcopy	PAGE	150	$	$
04		Color Hardcopy	PAGE	150	$	$
05	Programming and Processing Activities	Technician	HR	100	$	$
06		Programmer	HR	75	$	$
07		Project Leader	HR	50	$	$
TOTAL COST - LOT 1 (OPTION YEAR 4) YEAR 5						$
TOTAL EVALUATED COST - LOT 1 (YEARS 1 - 5)						$

***COST EVALUATION WILL INCLUDE 5-YEAR TOTAL (YEARLY TOTALS FOR PAGES B-5, 10, 15, AND 20**

Next.....Previous....Return to Section B Table of Contents.....Return to the Table of Contents

CONTINUATION SHEET - Supplies or Services and Prices/Costs LOT 2 - BASE YEAR							
CLIN	**TYPE**	**SIZE**	**IMAGE SPEC**	**ON/OFFSITE**	**QTY**	**UNIT PRICE**	**AMOUNT**
B.1.	**I. IMAGES OF CHALLENGING BOUND MATERIALS**						
01	H4 Cumbersome volumes, especially fragile, and/or color materials; cradle required	S2 Pages NTE 8 1/2x14 inches	2B	ON	140	$	$
02			3B	ON	1,716	$	$
03			2BH	ON	78	$	$
04			3BH	ON	156	$	$
05			2G	ON	78	$	$
06			3G	ON	140	$	$
07			2C	ON	78	$	$
08			3C	ON	218	$	$
09	H4 Cumbersome volumes, especially fragile, and/or color materials; cradle required	S3 Pages NTE 11x17 inches	2BH	ON	156	$	$
10			2BH	ON	156	$	$
11			2G	ON	218	$	$
12			2C	ON	218	$	$
B.2	**II. DERIVATIVE IMAGES**						
01	From a grayscale or color source image, produce a 300 dpi bitonal image at the same spatial resolution as the source image	Decompressed source file, NTE 10 MB	3DB	n/a	93	$	$
02		Decompressed source file, NTE 20 MB	3DB	n/a	93	$	$
03		Decompressed source file, NTE 30 MB	3DB	n/a	93	$	$
04		Decompressed source file, from 30-60 MB	3DB	n/a	93	$	$

CONTINUATION SHEET LOT 2 - BASE YEAR					
CLIN	**Supplies or Services and Prices/Costs**	**UNIT**	**QTY**	**UNIT PRICE**	**AMOUNT**
B.3.	**III. ADDITIONAL RELATED SERVICES AND ACTIVITIES**				

01	Photocopying of Source Material (per page)		PAGE	100	$	$
02	Printed Copies of Scanned Images (per page)	Black & White Hardcopy	PAGE	100	$	$
03		Grayscale Hardcopy	PAGE	50	$	$
04		Color Hardcopy	PAGE	50	$	$
05	Program and Processing Activities (per hour)	Technician	HR	25	$	$
06		Programmer	HR	20	$	$
07		Project Leader	HR	10	$	$
08	CONTRACT STARTUP/TESTING (ONE-TIME-FIRM-FIXED PRICE)		1 LOT	1 LOT	$	$
TOTAL COST - LOT 2 (BASE YEAR) YEAR 1						$

Next.....Previous....Return to Section B Table of Contents.....Return to the Table of Contents

LOT 2 - OPTION YEAR 1

CONTINUATION SHEET - Supplies or Services and Prices/Costs LOT 2 - OPTION YEAR 1							
CLIN	**TYPE**	**SIZE**	**IMAGE SPEC**	**ON/OFF SITE**	**QTY**	**UNIT PRICE**	**AMOUNT**
B.1	**I. IMAGES OF CHALLENGING BOUND MATERIALS**						
01	H4 Cumbersome volumes, especially fragile, and/or color materials; cradle required	S2 Pages NTE 8«x14 inches	2B	ON	148	$	$
02			3B	ON	1,755	$	$
03			2BH	ON	78	$	$
04			3BH	ON	195	$	$
05			2G	ON	78	$	$
06			3G	ON	148	$	$
07			2C	ON	78	$	$
08			3C	ON	265	$	$
09	H4 Cumbersome volumes, especially fragile, and/or color materials;	S3 Pages NTE 11x17 inches	2B	ON	195	$	$
10			2BH	ON	195	$	$
11			2G	ON	265	$	$

12	cradle required		2C	ON	265	$	$
B.2	**II. DERIVATIVE IMAGES**						
01	From a grayscale or color source image, produce a 300 dpi bitonal image at the same spatial resolution as the source image	Decompressed source file, NTE 10 MB	3DB	n/a	103	$	$
02		Decompressed source file, NTE 20 MB	3DB	n/a	103	$	$
03		Decompressed source file, NTE 30 MB	3DB	n/a	103	$	$
04		Decompressed source file, NTE 30-60 MB	3DB	n/a	103	$	$

CONTINUATION SHEET LOT 2 - OPTION YEAR 1

CLIN	Supplies or Services and Prices/Costs		UNIT	QTY	UNIT PRICE	AMOUNT
B.3	**III. ADDITIONAL RELATED SERVICES AND ACTIVITIES**					
01	Photocopying of Source Material (per page)		PAGE	100	$	$
02	Printed Copies of Scanned Images (per page)	Black & White Hardcopy	PAGE	100	$	$
03		Grayscale Hardcopy	PAGE	50	$	$
04		Color Hardcopy	PAGE	50	$	$
05	Program and Processing Activities (per hour)	Technician	HR	25	$	$
06		Programmer	HR	20	$	$
07		Project Leader	HR	10	$	$
TOTAL COST - LOT 2 (OPTION YEAR 1) YEAR 2						$

Next.....Previous.....Return to the Table of Contents

LOT 2 - OPTION YEAR 2

CONTINUATION SHEET Supplies or Services and Prices/Costs LOT 2 - OPTION YEAR 2

CLIN	TYPE	SIZE	IMAGE SPEC	ON/OFF SITE	QTY	UNIT PRICE	AMOUNT
B.1	**I. IMAGES OF CHALLENGING BOUND MATERIALS**						
01	H4 Cumbersome volumes, especially fragile, and/or color materials; cradle required	S2 Pages NTE 8 1/2x14 inches	2B	ON	176	$	$
02			3B	ON	1,775	$	$
03			2BH	ON	98	$	$
04			3BH	ON	215	$	$
05			2G	ON	98	$	$
06			3G	ON	176	$	$
07			2C	ON	98	$	$
08			3C	ON	527	$	$
09	H4 Cumbersome volumes, especially fragile, and/or color materials; cradle required	S3 Pages NTE 11x17 inches	2B	ON	215	$	$
10			2BH	ON	215	$	$
11			2G	ON	293	$	$
12			2C	ON	527	$	$
B.2	**II. DERIVATIVE IMAGES**						
01	From a grayscale or color source image, produce a 300 dpi bitonal image at the same spatial resolution as the source image	Decompressed source file, NTE 10 MB	3DB	n/a	123	$	$
02		Decompressed source file, NTE 20 MB	3DB	n/a	123	$	$
03		Decompressed source file, NTE 30 MB	3DB	n/a	123	$	$
04		Decompressed source file, from 30-60 MB	3DB	n/a	123	$	$

CONTINUATION SHEET LOT 2 - OPTION YEAR 2

CLIN	Supplies or Services and Prices/Costs		UNIT	QTY	UNIT PRICE	AMOUNT
B.3	**III. ADDITIONAL RELATED SERVICES AND ACTIVITIES**					
01	Photocopying of Source Material (per page)		PAGE	100	$	$
02	Printed Copies of Scanned Images	Black & White Hardcopy	PAGE	100	$	$
03		Grayscale Hardcopy	PAGE	50	$	$

04	(per page)	Color Hardcopy	PAGE	50	$	$
05	Program and Processing Activities (per hour)	Technician	HR	25	$	$
06		Programmer	HR	20	$	$
07		Project Leader	HR	10	$	$
TOTAL COST - LOT 2 (OPTION YEAR 1) YEAR 2						$

Next.....Previous.....Return to the Table of Contents

LOT 2 - OPTION YEAR 3

CONTINUATION SHEET - Supplies or Services and Prices/Costs LOT 2 - OPTION YEAR 3							
CLIN	**TYPE**	**SIZE**	**IMAGE SPEC**	**ON/OFF SITE**	**QTY**	**UNIT PRICE**	**AMOUNT**
B.1	**I. IMAGES OF CHALLENGING BOUND MATERIALS**						
01	H4 Cumbersome volumes, especially fragile, and/or color materials; cradle required	S2 Pages NTE 8 1/2x14 inches	2B	ON	195	$	$
02			3B	ON	1,883	$	$
03			2BH	ON	117	$	$
04			3BH	ON	273	$	$
05			2G	ON	117	$	$
06			3G	ON	195	$	$
07			2C	ON	117	$	$
08			3C	ON	624	$	$
09	H4 Cumbersome volumes, especially fragile, and/or color materials; cradle required	S3 Pages NTE 11x17 inches	2B	ON	273	$	$
10			2BH	ON	273	$	$
11			2G	ON	351	$	$
12			2C	ON	624	$	$
B.2	**II. DERIVATIVE IMAGES**						
01	From a grayscale or color source image, produce a 300 dpi bitonal image at the same spatial resolution	Decompressed source file, NTE 10 MB	3DB	n/a	140	$	$

02	as the source image	Decompressed source file, NTE 20 MB	3DB	n/a	140	$	$
03		Decompressed source file, NTE 30 MB	3DB	n/a	140	$	$
04		Decompressed source file, from 30-60 MB	3DB	n/a	140	$	$

CONTINUATION SHEET LOT 2 - OPTION YEAR 3

CLIN	Supplies or Services and Prices/Costs		UNIT	QTY	UNIT PRICE	AMOUNT
B.3	**III. ADDITIONAL RELATED SERVICES AND ACTIVITIES**					
01	Photocopying of Source Material (per page)		PAGE	100	$	$
02	Printed Copies of Scanned Images (per page)	Black & White Hardcopy	PAGE	100	$	$
03		Grayscale Hardcopy	PAGE	50	$	$
04		Color Hardcopy	PAGE	50	$	$
05	Program and Processing Activities (per hour)	Technician	HR	25	$	$
06		Programmer	HR	20	$	$
07		Project Leader	HR	10	$	$
TOTAL COST - LOT 2 (OPTION YEAR 3) YEAR 4						$

Next.....Previous.....Return to the Table of Contents

LOT 2 - OPTION YEAR 4

CONTINUATION SHEET Supplies or Services and Prices/Costs LOT 2 - OPTION YEAR 4

CLIN	TYPE	SIZE	IMAGE SPEC	ON/OFF SITE	QTY	UNIT PRICE	AMOUNT
B.1	**I. IMAGES OF CHALLENGING BOUND MATERIALS**						
01	H4 Cumbersome volumes, especially fragile, and/or color	S2 Pages NTE 8 1/2x14 inches	2B	ON	195	$	$
02			3B	ON	1,833	$	$
03			2BH	ON	117	$	$

04	materials; cradle required		3BH	ON	273	$	$
05			2G	ON	117	$	$
06			3G	ON	195	$	$
07			2C	ON	117	$	$
08			3C	ON	351	$	$
09	H4 Cumbersome volumes, especially fragile, and/or color materials; cradle required	S3 Pages NTE 11x17 inches	2BH	ON	273	$	$
10			2BH	ON	273	$	$
11			2G	ON	351	$	$
12			2C	ON	351	$	$
B.2	**II. DERIVATIVE IMAGES**						
01	From a grayscale or color source image, produce a 300 dpi bitonal image at the same spatial resolution as the source image	Decompressed source file, NTE 10 MB	3DB	n/a	124	$	$
02		Decompressed source file, NTE 20 MB	3DB	n/a	124	$	$
03		Decompressed source file, NTE 30 MB	3DB	n/a	124	$	$
04		Decompressed source file, from 30-60 MB	3DB	n/a	124	$	$

CONTINUATION SHEET LOT 2 - OPTION YEAR 4

CLIN	Supplies or Services and Prices/Costs		UNIT	QTY	UNIT PRICE	AMOUNT
B.3	**III. ADDITIONAL RELATED SERVICES AND ACTIVITIES**					
01	Photocopying of Source Material (per page)		PAGE	100	$	$
02	Printed Copies of Scanned Images (per page)	Black & White Hardcopy	PAGE	100	$	$
03		Grayscale Hardcopy	PAGE	50	$	$
04		Color Hardcopy	PAGE	50	$	$
05	Program and Processing Activities (per hour)	Technician	HR	25	$	$
06		Programmer	HR	20	$	$
07		Project Leader	HR	10	$	$

TOTAL COST - LOT 2 (OPTION YEAR 4) YEAR 5	$
***TOTAL EVALUATED COST - LOT 2 (YEARS 1 - 5)**	$

***COST EVALUATION WILL INCLUDE 5-YEAR TOTAL (YEARLY TOTALS FOR PAGES B-27, 29,
31, 33, AND 35**

Next.....Previous.....Return to the Table of Contents

The Library of Congress

Requests for Proposals

Table of Contents

for Section C

SECTION	TITLE	PAGES
C	**Description/Specification/Work Statement**	**C1-C37**
C.1	BACKGROUND	C-1
C.2	SCOPE OF WORK	C-1
C.3	LIBRARY FURNISHED MATERIALS AND TRAINING	C-3
C.4	SAFE HANDLING AND SCANNING OF SOURCE MATERIALS - LOT 1 AND LOT 2	C-4
C.5	GENERAL IMAGE TYPES, CHARACTERISTICS, AND REQUIREMENTS - LOT 1 AND LOT 2	C-8
C.6	IMAGING SMALL BOUND MATERIALS - LOT 1	C-14
C.7	LOT 1 - UNBOUND MATERIALS	C-16
C.8	LOT 2 - LARGE AND COLOR BOUND MATERIALS	C-20
C.9	SCANNING COMPONENTS - LOT 1 AND LOT 2	C-21
C.10	FILENAMES AND DELIVERY DIRECTORIES	C-23
C.11	TEXT CONVERSION AND SGML - ENCODING	C-25
C.12	RELATED SERVICES AND ACTIVITIES - LOT 1 AND LOT 2	C-28
C.13	CONTRACT START UP AND TESTING ACTIVITY - LOT 1 AND LOT 2	C-28
C.14	PRODUCTION WORKFLOW, PROCEDURES AND PROJECT MANAGEMENT - LOT 1 AND LOT 2	C-31
C.15	DELIVERABLES AND DELIVERY - LOT 1 AND LOT 2	C-36

Return to Table of Contents

SECTION C

DESCRIPTION/SPECIFICATION/WORK STATEMENT

C.1

BACKGROUND

The central mission of the Library of Congress (Library/LC) is to assemble, preserve, and provide access to a universal collection representing human knowledge, in order to serve the United States Congress and the American people. During the next several years, the provision of access to this collection will increasingly be accomplished via online networks and the Library of Congress will work cooperatively with other libraries and archives to establish a national digital library. To support its growing role in online access, the Library has established the National Digital Library Program (NDLP), which has as its primary focus the conversion of historical collections to digital form. During the next five years, the Library plans to convert as many as five million of its more than 100 million items. The material to be converted includes books and pamphlets, manuscripts, prints and photographs, motion pictures, microfilm and sound recordings. As the national library of the United States, the Library of Congress is committed to establishing and maintaining standards and practices that will support the development of the national digital library.

C.2

SCOPE OF WORK

The Library of Congress requires the conversion of a variety of LC archival textual collections, books, and book-like printed matter to electronic form. This will include converting printed, handwritten, or illustrated pages into (1) raster-scanned digital images of the original pages and (2) machine-readable texts encoded with Standard Generalized Markup Language (SGML). Generally, manuscripts and similar collections shall be converted to digital image-only sets, while books and other longer narrative works may require conversion both to an image set and to an SGML-encoded text file. The resulting digital image and text deliverables will be incorporated into computerized presentations that are part of the Library's National Digital Library Program. Work shall be performed under either LOT 1 or LOT 2 requirements which may be awarded as one (1) or two (2) separate contracts. Work shall proceed as small- or medium-scale projects of coherent groups of related materials under task orders. LOTS 1 and 2 are differentiated by the types of materials to be digitized. LOT 1 includes the majority of the work to be completed: unbound materials (i.e., items made up of separate sheets of paper) and a variety of small bound materials (i.e., books and pamphlets that are in good physical condition (robust), exclude color, and have smaller pages). In addition, LOT 1 includes the conversion of digital images to SGML-encoded, machine readable texts. LOT 2 consists of large and color bound materials (i.e., books, pamphlets, and bound manuscripts that may be cumbersome, fragile, rare, include significant color elements, or have larger pages).

C.2.1

Types of Original Materials During the next few years, the focus for the NDL Program will be American historical collections. Plans are being developed to digitize some of the following materials:

LOT 1--

Sheet music from 19th century, uncopyrighted
Theater playbills
Documents from the first 14 Congresses
Journals of the Continental Congress
Elliot's Debates on the Ratification of the Constitution
Ferrand's Records of the Federal Convention
Native American legal materials
Reports of slavery trials
Selected books and periodicals

LOT 2--

Letters in bound volumes in the Presidential Papers
Bound holograph music manuscripts
Oversize biographical compendia
Books illustrated with color lithographs

Items in the collections described above are often unique and valuable, and most originals shall not be removed from the Library of Congress. Thus, the initial capture of most materials shall take place onsite at the Library. Many items are bound and cannot be disbound for scanning. Post scanning processing and text conversion shall take place off-site at the contractor's facility.

C.2.2

Image Capture and Delivery - LOT 1 and LOT 2

For both LOTs 1 and 2, the digitization of Library collections demands more than the production of high-quality images in the file formats. When delivered by the contractor, the sets of images and texts must also be coherently and logically named and/or numbered, placed in delivery directories with prescribed characteristics (see C.10), and accompanied by a carefully maintained scanning log and printed directory list. After the images are loaded into the Library's retrieval system, these filenames and directories will link the images to bibliographic records (computer catalog "cards") or to finding aids (not unlike the yellow pages in a telephone directory).

C.2.3

Conversion and SGML-Encoding of Texts - LOT 1

In 1992 the Library, as part of its American Memory pilot digital conversion project, developed a Document Type Definition (DTD) for the conversion of historical texts to machine-readable form. This DTD follows the Text Encoding Initiative (TEI) approach for the use of Standard Generalized Markup Language (SGML) in the conversion of historical materials. Text conversion shall be performed in accordance with the existing DTD. Text conversion is only required under LOT 1.

C.2.4

Other Activities

C.2.4.1

Contract Startup/Testing Activity

Due to the complex, interrelated technical elements associated with this contract, an initial activity will begin with an eight-week (LOT 1) or five-week (LOT 2) startup and testing phase to provide a forum to address and finalize the definition of technical elements (see C.13 and CLIN B.5.08).

C.2.4.2

Related Services

During performance of the tasks, a variety of incidental and related services shall be required (see C.12) for both LOT 1 and LOT 2. These may include photocopying materials prior to scanning, printing quantities of digital images, and carrying out miscellaneous custom programming or computer processing functions related to the unique characteristics of the task at hand.

C.2.4.3

Workflow Tracking System

The Library will develop a workflow tracking system that tracks the flow of materials through the digitization process. The system, which connects both the Library and several contractors via computer networks, will track the progress of each batch of scanned materials from the time of scanning to the payment for services rendered for each batch. This tracking system will be used for both LOT 1 and LOT 2. (See also Section J, Attachment 9)

C.3

LIBRARY FURNISHED MATERIALS AND TRAINING

Unless otherwise noted, the Library furnished materials shall be applicable for both LOT 1 and LOT 2.

C.3.1

Multiple Scanning Facilities

The Library will provide space, electricity, local telephone service, and other items determined necessary and as agreed to prior to award. The work may entail the use of multiple crews at multiple locations at the Library. Facilities will be provided at appropriate locations (see also C.4.1).

C.3.2

Identifying Targets

For each item to be scanned, the Library will provide a paper target to help identify the materials to be scanned. The target is to be the first image scanned for each item, and given a control number of zero and carried out to the number of digits required by the naming scheme to be used. The type, format and resolution of the identifying target shall be the same as the type, format and resolution as specified for the document or volume the target identifies. For items not to be converted to SGML-encoded, machine-readable texts the target will contain the item name to be used for naming the digital files and the filenaming pattern to be used, the title of the document, and the title of the collection to which the item belongs. For materials to be converted to SGML-encoded, machine-readable texts, the target will contain all of the information needed to create the document's TEI header for the SGML text. Examples of typical targets are provided in Section J, Attachment 3. Note that, for this contract, a file folder containing multiple documents may be considered to be a single item.

C.3.3

DTD, Tag Library, and Keying Instructions - LOT 1 only

The Library will provide the SGML DTD for the encoding of texts designated for conversion. This will be accompanied by documentation of tag definitions and usage, and specific keying instructions.

C.3.4

Training in Safe Handling

Prior to onsite scanning, staff members from the Library's Conservation and Binding Offices will provide a two-hour training session to contractor scanning personnel on procedures to be used in the physical handling of original items in all phases of the capture workflow. After this initial training session, all

replacement scanning personnel shall be fully trained prior to beginning work.

C.4

SAFE HANDLING AND SCANNING OF SOURCE MATERIALS - LOT 1 AND LOT 2

C.4.1

Scanning Locations and Equipment The contractor shall provide and maintain all equipment and associated software for the conversion work. The equipment used for initial image capture must be determined to be non-damaging by the Library's Conservation Office prior to contract award. The majority of the items to be converted cannot be removed from the Library of Congress; thus, most scanning shall take place at the Library, in work space furnished by the Library. Scanning facilities at the Library will vary according to the source of the collection materials, its condition, and value. Facilities to be provided in the following locations and as determined prior to issuance of each task order:

- the National Digital Library Program office or its equivalent;
- the collection processing section of a curatorial division; and/or
- the reading room of a curatorial division.

The contractor shall deliver and set up suitable equipment and supplies at the Library during the period(s) when scanning is to take place. The contractor is responsible for all equipment left onsite at the Library. When contractor equipment is to be idle for an extended period (more than three (3) weeks if located in the NDLP office or a curatorial processing section and more than one (1) week if located in a reading room) or when the scanning projects have been concluded, the equipment shall be removed from the Library by the contractor. All such activities shall occur at times pre-approved by the Library. The Library cannot assure the provision of a locked facility solely for the use of the contractor equipment.

C.4.2

Off-site Scanning

Under special circumstances and only when indicated and included in a task order, the Library may permit materials to be taken off-site for scanning. The contractor shall provide a facility and equipment that will secure, protect, and not damage the materials.

C.4.3

Onsite Scanning Hours

Most of the scanning work shall be done on site at the Library during regular business hours Monday through Friday. The contractor may be required to furnish scanning services during evening, early

morning or weekend hours. Scanning at the Library shall generally be performed during public hours, between 8:30 a.m. and 5:00 p.m. or 9:00 p.m. (depending on the day of the week). In some cases, depending on the scanning location, the Library may permit additional hours between 6:30 a.m. and 9:30 p.m. in which scanning crews may be scheduled to work in shifts. The Library is closed on Sundays.

C.4.4

Scanning Personnel Requirements

A two-person crew shall be required when scanning all bound materials and when scanning unbound materials when items must be located, carefully removed from, and returned to file folders. One operator working alone shall be permitted only for scanning of specified unbound materials (to be defined prior to issuance of task order). It is estimated that with hard-to-scan materials such as may be encountered under this contract, that capture rates ranging from about 200 to 600 images per day can be achieved. In order to capture quantities of images in the ranges outlined in Schedule B, multiple crews will be required. The contractor shall provide sufficient equipment and personnel to achieve such levels of image capture.

C.4.5

Scanning Equipment and Safe Handling

The equipment (including lights) used for all image capture shall not damage original materials nor shall the manner of its use cause damage. All scanning equipment is subject to the approval of the Library's Conservation Office prior to contract award. Rough handling or the placement of stress on the original, especially the binding of a book, is unacceptable. Damage avoidance from handling or equipment shall have priority over the requirements including the capture of subtleties of printing or writing on originals.

C.4.6

Book Cradle Design and Other Support Structures - LOT 1 AND 2

A book cradle is required for all materials in LOT 2 and for bound materials in handling category H3 of LOT 1. Support is required for unbound materials in handling categories H8 and H9 in LOT 1.

C.4.6.1

Support for Bound Materials

For image types which require the use of a book cradle or support of some kind to prevent damage to the material while scanning, the following requirements apply:

- The contractor shall not use devices that employ a glass-topped box in which the book is opened

and pressed flat upwards against the glass, or where the glass is pressed down upon the open book.

- The contractor shall not use devices that employ plates of glass, pressed downward on the open book and covering the gutter area.
- The contractor shall not use any materials which may result in tearing or chipping of pages, damage to the spine or to the text block, or damage to the area where the text block is attached to the cover of the book.
- The contractor may use a sheet of glass applied gently by the operator to the single page which is being scanned.
- The contractor may use other physical supports if approved by the Library such as flexible, wedge-like supports combined with materials to support the book spine as the weight of the text block shifts during scanning.

For further information about the areas of a book which require special support, refer to Section J, Attachment 10.

C.4.6.2

Support for Unbound Materials

Certain unbound materials, such as folded sheets of music, may require other types of support. For example, fragile sheet music which has been folded for long periods of time has a tendency to tear at the fold. These types of folded sheets shall not be scanned with the crease pressed flat against the scanning bed. While these sheets can normally be inverted and scanned page-by-page on a book-edged scanner and sometimes on a typical flatbed scanner, the area or page which is not being scanned must be supported to prevent damage or undue stress to the crease or to the pages themselves. The contractor shall provide a support mechanism which will accommodate these requirements. This support structure need not be elaborate, but must be functionally adequate to meet the requirements.

C.4.7

Operation of Equipment

Contractor personnel shall perform all handling and scanning labor which includes removing items from storage containers (usually in the case of unbound materials) one at a time, performing the scanning and associated record keeping, and replacing the items in the containers from which they were removed in the same order in which they were found. Library of Congress staff members may be present only to monitor that materials are properly handled.

C.4.8

Resolution Targets

In order to verify the calibration of the scanning equipment and to ensure the best possible images, the Library requires that a resolution target be scanned. The Library requires the use of the IEEE Std 167A-1987 resolution target. The target shall be scanned for each machine at the start of every fifth batch or every five (5) working days, whichever comes first. An image of the target shall be contained in the delivery batch with which it was scanned. The target images shall be named according to the specifications in C.10**.** The target shall be scanned at the same resolution and pixel depth as the images in that batch. If images of different resolutions and pixel depth are to be contained in that batch, then the target shall be scanned at each resolution and pixel depth. For example, if the entire batch consists of 300 dpi bitonal images, then the target need only be scanned as a 300 dpi bitonal image. If the batch contains a mixture of 300 dpi bitonal images and 300 dpi grayscale images, then the target shall be scanned as both a 300 dpi bitonal image and a 300 dpi grayscale image.

C.4.9

Fragile Materials

Some materials, both bound and unbound, may be designated by the Library's Conservation Office as fragile and require special handling. The Library will provide instruction for special handling techniques for all instances of fragile items.

C.4.10

Damage to Original Documents/Materials

Preventing damage to original documents shall be the primary concern during scanning. While most of the documents to be scanned shall be sturdy enough to be scanned when handled according to the directions of the Library's Conservation Office, there may be times when it is not possible to determine, in advance, potential damage to the original source document during the scanning process. In the event that any damage to an original occurs during the initial capture, the scanning technician shall cease scanning that original and shall seek assistance from a Library representative. Such damage shall be defined at a minimum level to include the breaking of the book spine, pages coming out of the original binding, the cracking of brittle pages, and so on. Instructions on how to recognize damage will be included in the Library's training on the safe handling of originals and shall be followed at all times.

C.5

GENERAL IMAGE TYPES, CHARACTERISTICS, AND REQUIREMENTS - LOT 1 AND LOT 2

A raster-scanned image of each page or sheet and an image of each identifying target of various bound and unbound materials shall be produced and delivered in a separate file in accordance with specifications.

For manuscript materials, some of the grayscale or color images to be produced will serve as provisional preservation-quality images, for use by the Library in its continued investigation of digital reformatting for preservation. When this is required, the contractor shall produce both a grayscale or color preservation-quality image and a derivative bitonal access image. The requirement for preservation quality images shall be stated in the task order.

The following chart provides a summary of the image specifications for both LOT 1 and LOT 2. Image types and resolutions will be specified prior to the issuance of a task order and, whenever possible, like materials will be grouped together so that production efficiencies may be achieved.

Image Type	**Description**	**Format/ Compression**	**Comment**	**Resolution (DPI)**	**Abbre-viation for Image Spec**
Bitonal	1 bit per pixel, **without** special treatment of halfttones	TIFF files, ITU Group 4 compression	Produced by direct scanning of bound and unbound materials	200 300 400	2B 3B 4B
Bitonal	1 bit per pixel, with special treatment of halftones	TIFF files, ITU Group 4 compression	Produced by direct scanning of bound and unbound materials	200 300 400	2BH 3BH 4BH
Bitonal	1 bit per pixel, images derived from grayscale or color images	TIFF files, ITU Group 4 compression	Produced by post-processing grayscale or color images	300	3DB
Bitonal	1 bit per pixel, images of segments of larger images, w/o special treatment of halftones	TIFF files, ITU Group 4 compression	Produced by post-processing larger images	200 300	2BS 3BS
Grayscale	8 bits per pixel	JFIF files, JPEG compression	Produced by direct scanning of bound and unbound materials	200 300	2G 3G
Grayscale	8 bits per pixel, segments of larger images	JFIF files, JPEG compression	Produced by post-processing larger images	200 300	2GS 3GS

Color	24 bits per pixel	JFIF files, JPEG compression	Produced by direct scanning of bound and unbound materials	200 300	2C 3C
Color	24 bits per pixel, segments of larger images	JFIF files, JPEG compression	Produced by post-processing larger images	200 300	2CS 3CS

Refer to C.6 - C.9 for specific image requirements for each category of material to be digitized.

C.5.1

Bitonal Images

This section refers specifically to image types 2B, 3B, and 4B from the chart above.

The contractor shall have the capability to produce bitonal images of all bound and unbound materials. Bitonal images shall have a pixel depth of 1 bit-per-pixel and shall generally be scanned at resolutions of 200, 300, or 400 dots per inch (dpi) depending on the size of the original and the scanner type. For example, certain large pages in bound items shall generally be scanned at the lowest resolution. The images shall be stored as an "Intel" TIFF (Tagged Image File Format) file, with the header content specified. The compression algorithm shall be ITU (Formerly CCITT) Group 4.

The initial-capture system shall include dynamic threshholding or a similar feature in order to capture both dark-imprint typing and light-imprint pencilled handwriting on a manuscript page or similar item. The most challenging types of dark- and light-imprint pages, typically found in unbound manuscript collections, shall be captured as grayscale or color images as described below.

C.5.1.1

TIFF Version

TIFF version 5.0 has been determined to be satisfactory and shall be acceptable; however, subject to testing, version 6.0 (or later) may be acceptable.

C.5.1.2

TIFF File Header Requirements

The Library requires that "typical" or "expected" data be provided for most TIFF tags (normally, the data supplied by software default settings). In addition, the contractor shall include additional information in

the 269, 315, and 306 tags. The requirements for the TIFF headers are described in Section J, Attachment 5. The Library has used varying approaches for the use of the TIFF header tags 282, 283, and 296.

C.5.2

Bitonal Images--Book Pages with Halftone Illustrations and/or Finely Inscribed Line Art Drawings

This section refers specifically to image types 2BH, 3BH, and 4BH from the chart above. Compression, resolution, TIFF version and header information requirements are stated in C.5.1.

Illustrations in printed matter often consist of printed halftones or finely inscribed line drawings. The contractor shall capture printed halftones and finely inscribed line art using a technique to suppress or reduce moir, patterns.

The treatment of moir, patterns shall be accomplished in one of the following ways, or by an equally effective method proposed by the contractor and approved by the Library:

Option 1 **(preferred)**: Descreening and rescreening approach or an equivalent process.

If descreening and rescreening or its equivalent is used to suppress moir, patterns, the contractor shall deliver a single image which reproduces the text without dithering and applies special treatment to the illustration

Option 2 **(acceptable)**: Capture of the image using diffused patterning (often called dithering).

If dithering or its equivalent is used to suppress moir, patterns, the contractor shall deliver a pair of images:

one (1) image of the full page reproduced as a non-dithered bitonal image
one (1) image of the full page reproduced as a dithered bitonal image

Book pages with simple or "coarse" line art (not finely inscribed) shall be scanned without treatment.

Examples of printed halftones, finely inscribed line art, and simple line art in addition to Library findings on this subject can be found in Section J, Attachment 3.

C.5.3

Derivative Bitonal Images - LOT 1 and LOT 2

This section refers specifically to image type 3DB from the chart above. Derivative bitonal images are

required for both LOT 1 and LOT 2.

For certain materials, typically manuscript items, the Library may require capture and archive a grayscale or color image for archival purposes and a bitonal image for access purposes. The contractor shall derive this bitonal image from the grayscale or color by computerized post-processing. Regardless of the resolution of the original capture, derivative bitonal images shall be 300 dpi. Compression, resolution, TIFF version and header information requirements are stated in C.5.1. Sophisticated threshholding algorithms shall be applied in the post-processing to assure minimum loss of information.

Because computer processing time is dependent on the decompressed size of the source image (the larger the image, the longer the processing time), four (4) categories of source images from which bitonal images shall be derived are defined as follows:

- Decompressed source file, not to exceed (NTE) 10Mb
- Decompressed source file, greater than 10 MB, NTE 20Mb
- Decompressed source file, greater than 20 MB, NTE 30Mb
- Decompressed source file, greater than 30 MB, NTE 60MB

C.5.4

Derived Bitonal Image Segments of Images of Large Pages - LOT 1 only

This section defines requirements for image types 2BS, 3BS, 2GS, 3GS, 2CS, and 3CS from the chart above. Compression, resolution, TIFF version and header information requirements are stated in C.5.1. Derived image segments of images of large pages are required for LOT 1 only. When required in a task order, the contractor shall segment large images and deliver a set of smaller images in addition to the large image that was initially captured. The general concept is analogous to that described in C.7.4 for the segmented capture of large pages.

The images shall include the percentage of overlap stated in Section C.7.4.1 and be delivered with filenames that represent the naming sequence stated in Section C.10.3.5. The contractor shall produce the set of smaller segment images of large pages in a post-process.

The segment images shall retain the native resolution and image type of the large image. For example, a 24x36-inch foldout map captured as a 300 dpi bitonal image shall be segmented into six images, each of which will fit on 8.5x11 inch paper when printed without rescaling. Thus each segment shall also be a 300 dpi bitonal image which provides the required 20 percent overlap with its neighbors.

Four (4) categories of source images from which segmented images shall be derived are defined as follows:

- Decompressed source file, not to exceed (NTE) 10Mb

- Decompressed source file, greater than 10 MB, NTE 20Mb
- Decompressed source file, greater than 20 MB, NTE 30Mb
- Decompressed source file, greater than 30 MB, NTE 60MB

C.5.5

Grayscale and Color Images

This section refers specifically to image types 2G, 3G, 2C, and 3C from the chart above. The contractor shall have the capability to produce grayscale for all bound and unbound materials for both LOT 1 and LOT 2. Color images are required for all categories of unbound materials in LOT 1 and all categories in LOT 2. Grayscale images shall be produced for originals that have significant tonal variation (e.g., manuscripts) and for printed matter with illustrations that cannot be treated by dithering, de-screening, etc. Color images shall be created for originals that have significant amounts of color. Specific instructions regarding grayscale and color capture will be provided at the time a task order is issued.

C.5.5.1

Grayscale and Color Resolution, Format, and Compression

Grayscale and color images shall be required at resolutions of 200 and 300 dots per inch (dpi). Image resolution for particular jobs will be finalized with the execution of the task order. Grayscale images shall have a pixel depth of 8 bits-per-pixel while color images shall have a pixel depth of 24 bits-per-pixel. The compression algorithm used shall be JPEG. Legibility and ease of transmission via computer network versus a perfect facsimile are required. Therefore, the JPEG compression quality factor chosen by the contractor shall yield an average compression ratio between 20:1 and 30:1. These images shall be stored as JFIF (JPEG File Interchange Format) files, with .jpg as the file extension.

C.5.5.2

Gamma Correction/Contrast Stretching

Images may appear gray even when the original sheet is white or off-white. In order to brighten the appearance of the paper in images of documents, the contractor shall be capable of applying gamma correction or contrast stretching to grayscale and color images. Enhancement algorithms shall be applied at a sufficiently modest level to preclude the loss of information from the original. Gamma correction or contrast stretching may be applied automatically at scan time or during post-scan processing. Gamma correction or contrast stretching algorithms shall be applied before images are compressed and before any derivative bitonal images have been produced.

C.5.6

Image Orientation - LOT 1 and LOT 2

In the delivered digital image, the top of the original document or page shall appear at the top of the display screen. Note that "right side up" for printed matter is defined as "the top of the book or magazine page" (portrait mode). An illustration or table in a book or magazine may be printed "sideways" (landscape) to fit the page, thus aligning the top of the page with the side of the illustration or table. In these cases, the top of the image shall be the top of the page and not the top of the illustration.

C.5.7

Cropping - LOT 1 and LOT 2

The Library requires presentation of the entire original sheet or page. In no event shall the actual document be cropped. Researchers using Library of Congress digital documents often wish to be reassured that the entire document has been captured. This is especially desirable for unbound manuscript documents. A "border zone" approximately 1/4-inch or less of the surface behind the scanned document shall be provided whenever possible. For some combinations of document sizes and scanning equipment, capturing such a margin may not be possible for all four edges of the page. Therefore, the Library desires a 1/4-inch margin wherever possible, and requires at least that the entire original sheet or page is captured.

C.5.8

Skewing - LOT 1 and LOT 2

The Library requires that images created from unbound materials shall not be skewed. For bound materials, the library requires that images shall not be skewed; however, the tightness of the bindings may result in slightly skewed images. In these cases, the contractor shall note in the scanning logs that the image was scanned using best efforts, and shall note the reason for and extent of the skewing.

C.6

IMAGING SMALL BOUND MATERIALS - LOT 1

The types of materials to be digitized fall into two separate categories and are defined as lots. LOT 1 includes the majority of the work to be performed: unbound materials (i.e., items made up of separate sheets of paper) and a variety of small bound materials (i.e., books and pamphlets that are robust, exclude color, and have smaller pages). A single scanned image shall be made for each page of an original item. Exceptions to this rule may arise in the case of large sheets, foldout book pages, and some illustrated printed matter. These exceptions are discussed in C.5.2 and C.7.3.

C.6.1

Sizes

Bound materials typically consist of printed matter and are defined and described in two (2) size categories:

- S1 - Bound edge not to exceed 11 inches, open page measured from the bound edge to the page edge not to exceed 8 1/2 inches
- S2 - Bound edge greater than 11 inches and not exceeding 14 inches, open page measured from the bound edge to the page edge not to exceed 8 1/2 inches

C.6.2

Handling

The manner in which bound materials shall be handled depends on their physical condition, including variances in the type or tightness of the binding, closeness of text to the binding, and brittleness of the pages. Note that the typical flatbed scanner is not acceptable for bound materials at the Library.

In terms of handling, LOT 1 includes three (3) classes of bound materials:

- H1 - Books that may be opened 130 degrees and turned upside down; sizes S1 and S2.
- H2 - Books that can lie open 180 degrees on a flat surface without pressure from above (no glass plates or book boxes but held open by gentle operator assistance), but cannot be turned upside down; size S1.
- H3 - Books that must be supported with a wedge or held in a book cradle that allows opening to 130 degrees or less, without pressure from a glass plate, but held open by gentle operator assistance; size S1

C.6.3

Image Specifications for Small Bound Materials

It is required that the contractor have the capability to scan small bound materials in the combinations of handling categories, sizes, and image types listed in the table that follows. (Image requirements are provided in section C.5.)

SMALL UNBOUND MATERIALS			
Handling	Size	Image Types	Image Spec Abbreviation
H1	S2	300 dpi bitonal images	3B

Bound, open NTE 130 degrees, can invert	Pages NTE 8 1/2x14 inches	400 dpi bitonal images	4B
		300 dpi bitonal halftone treatment	3BH
		400 dpi bitonal halftone treatment	4BH
		200 dpi grayscale images	2G
		300 dpi grayscale images	3G
H2 Bound, open NTE 130 degrees, no invert	S1 Pages NTE 8 1/2x11 inches	300 dpi bitonal images	3B
		400 dpi bitonal images	4B
		300 dpi bitonal halftone treatment	3BH
		400 dpi bitonal halftone treatment	4BH
		200 dpi grayscale images	2G
		300 dpi grayscale images	3G
H3 Bound, open NTE 130 degrees, no invert, use wedge or cradle	S1 Pages NTE 8 1/2x11 inches	300 dpi bitonal images	3B
		400 dpi bitonal images	4B
		300 dpi bitonal halftone treatment	3BH
		400 dpi bitonal halftone treatment	4BH
		200 dpi grayscale images	2G
		300 dpi grayscale images	3G

C.7

LOT 1 - UNBOUND MATERIALS

Unbound, separate-sheet materials include typed manuscripts, letters and other handwritten documents. Some documents include a mixture of typed and handwritten text. The degree of legibility varies greatly among documents.

C.7.1

Sizes

The majority of pages range from about 6x9 inches to about 8 1/2x11 inches. Because many are from periods before paper sizes were standardized, and because many pieces of personal correspondence are included, document sizes vary considerably, often from one page to the next. In addition, manuscript collections may include extensive quantities of slips of paper or cards on the order of 3x5 inches. These collections may also include folded posters, newspaper pages, or other sheets on the order of 11x17 inches. Collections also contain documents (like sheet music) that consist of folded sheets (creating "pages") and sheets that exceed 11x17 inches in size. All of these highly variable materials can appear in historical archival collections and all shall be scanned.

Unbound materials are defined in three (3) categories:

- S4- Documents not to exceed 8 1/2x14 inches
- S5- Documents not to exceed 11x17 inches
- S6- Documents not to exceed 36x24 inches, to be captured in segments

In some cases, when the task order requires, sheets larger than 11x17 shall not be captured in scanned segments but shall be handled as custom work, requiring pre-photocopying or other techniques.

C.7.2

Handling

The Library's unbound, separate-sheet materials are often fragile, unique and valuable. The Library will not permit them to be scanned using a high volume, automatic document feeder. These materials shall be placed by hand and scanned one page at a time, using a flatbed or book-edge scanning device. Devices shall be capable of scanning materials with original sizes up to 11x17 inches. Materials protected by mylar shall be scanned through the mylar, except when special exceptions are made and approved in advance. There are four (4) classes of unbound materials defined in terms of handling:

- H6- Unbound materials
- H7- Fragile unbound materials
- H8- Folded sheets (see C.7.3)
- H9- Large sheets or foldouts to be captured in segments (see C.7.4) The materials in any category may or may not be encased in mylar.

C.7.3

Folded Sheets

This section refers to handling category H8, above. The archetypal example of an unbound folded sheet is sheet music. For example, an eight-page piece of sheet music consists of two large pieces of paper that have been folded, one inside the other. The front and back covers are printed on one side of the first sheet of paper; on the other side, the first and sixth pages of the music. On the other (inside) sheet of paper are printed music pages two through five. (See Section J, Attachment 3 for an example.) When the overall sheet size for unbound folded sheets (comprising both "pages") is 8 1/2x11 inches or less, the sheet (pair of pages) shall be scanned and delivered as a unit. When the overall sheet size exceeds 8 1/2x11 inches, each page shall be presented as a separate image. Support for the page not being scanned is required (see C.9). The initial capture may be as a single unit with page-image separation occurring in a post-process; the delivery, however, shall be of the separate pages. The delivered images for the separate pages (for sheets greater than 8 1/2x11 inches) shall be numbered to reflect the actual cover and page sequence of the original item. (Detailed requirements on numbering are provided in Section J, Attachment 4.)

C.7.4

Requirements for Capture in Segments

This section refers to handling category H9, above. Large sheets are encountered in books (where they are folded to fit within the binding), in manuscript file folders, and in other collections. Foldout pages often present maps, charts, or illustrations. These pages shall be removed from the binding by Library personnel and scanned by the contractor as unbound pages. The foldouts must be integrated into the delivery sequence of the bound volume. The contractor shall capture large sheets or foldouts in segments (rather than as one large image) when sheet sizes are greater than 11x17 and less than 36x24 inches. No individual segment shall be greater than 8 1/2x11 inches. The contractor shall also capture sheets smaller than 11x17 in segments when (1) extremely fine print or fine detail or (2) special conditions of fragility and propensity to tear are present. The Library will whenever possible, identify such materials (or the likelihood of encountering such materials) at the time a task order is issued. Fine-print pages shall be segmented to ensure legibility. Fine print on pages smaller than 11x17 may occur from time to time in a collection; when they are encountered, the contractor shall confer with the COTR about the proper action to take. Capture-by-segment shall be similar to that for folded sheets: a portion of the sheet shall be placed on a scanner or under a camera for each exposure. The difference is that for large sheets, as many as six or eight exposures may be made. Special care in handling is required in order to avoid damage to the original and additional support of the page is required, see C.4. Segment images shall be named according to the specifications in Section J, Attachment 4.7.

C.7.4.1

Overlap of Segment Images

In order to ensure that no part of a large sheet or page is lost and to permit end users to orient themselves as they move between segments, each segment image shall overlap with all adjacent images. This overlap shall be 20 percent whenever possible but shall not fall below 10 percent, except with the approval of the Library.

C.7.5

Image Specifications for Unbound Materials

The Library requires the contractor to have the capability to scan unbound materials in the combinations of handling categories, sizes, and image types listed in the table that follows.

UNBOUND MATERIALS			
Handling	Size	Image Types	Image Spec Abbreviation
H6 Unbound materials	S4 Pages NTE 8 1/2x14 inches	300 dpi bitonal images	3B
		400 dpi bitonal images	4B
		300 dpi bitonal halftone treatment	3BH
		400 dpi bitonal halftone treatment	4BH
		200 dpi grayscale images	2G
		300 dpi grayscale images	3G
		200 dpi color images	2C
		300 dpi color images	3C
H6 Unbound materials	S5 Pages NTE 11x17 inches	300 dpi bitonal images	3B
		400 dpi bitonal images	4B
		300 dpi bitonal halftone treatment	3BH
		400 dpi bitonal halftone treatment	4BH
		200 dpi grayscale images	2G
		300 dpi grayscale images	3G
		200 dpi color images	2C
		300 dpi color images	3C
H7	S4	300 dpi bitonal images	3B

Fragile unbound materials	Pages NTE 8 1/2x14 inches	400 dpi bitonal images	4B
		300 dpi bitonal halftone treatment	3BH
		400 dpi bitonal halftone treatment	4BH
		200 dpi grayscale images	2G
		300 dpi grayscale images	3G
		200 dpi color images	2C
		300 dpi color images	3C
H7 Fragile unbound materials	S5 Pages NTE 11x17 inches	300 dpi bitonal images	3B
		400 dpi bitonal images	4B
		300 dpi bitonal halftone treatment	3BH
		400 dpi bitonal halftone treatment	4BH
		200 dpi grayscale images	2G
		300 dpi grayscale images	3G
		200 dpi color images	2C
		300 dpi color images	3C
H8 Folded sheets (capture of one half at a time), support required	S5 Single page NTE 11x17 inches (full sheet NTE 22x17 inches)	300 dpi bitonal halftone treatment	3B
		400 dpi bitonal halftone treatment	4B
		200 dpi grayscale images	2G
		300 dpi grayscale images	3G
		200 dpi color images	2C
		300 dpi color images	3C
H9 Large sheets or foldouts captured in segments, special handling and support required, (cost per segment)	S6 Full sheet NTE 36x24 inches; segments NTE 8.5x11 inches	300 dpi bitonal images	3B
		300 dpi bitonal halftone treatment	3BH
		300 dpi grayscale images	3G
		300 dpi color images	3C

C.8

LOT 2 - LARGE AND COLOR BOUND MATERIALS

LOT 2 consists of large and color bound materials (i.e., books, pamphlets, and bound manuscripts that may be cumbersome, fragile, rare, include significant color elements, or have larger pages). Typical page samples are reproduced in Section J, Attachment 3.

C.8.1

Sizes

Bound materials typically consist of printed matter. Bound materials for LOT 2 work are described and defined in two (2) size categories:

- S2- Bound edge greater than 11 inches and not exceeding 14 inches, open page measured from the bound edge to the page edge not to exceed 8 1/2 inches
- S3- Bound edge greater than 11 inches and not exceeding 17 inches, open page measured from the bound edge to the page edge not to exceed 11 inches

C.8.2

Handling

Materials in LOT 2 are especially challenging because they are often very large, cumbersome, and fragile. These volumes require the use of a cradle during capture. The handling category for LOT 2 is defined as follows:

- H4- Cumbersome volumes, fragile and/or color materials; cradle required

C.8.3

Image Specifications for Large and Color Bound Materials

The Library requires the contractor to have the capability to scan large and color bound materials in the combinations of handling categories, sizes, and image types listed in the table that follows.

LARGE AND COLOR BOUND MATERIALS

Handling	Size	Image Types	Image Spec Abbreviation
H4 Cumbersome volumes, fragile, and/or color materials; cradle required	S2 Pages NTE 8 1/2x14 inches	200 dpi bitonal	2B
		300 dpi bitonal	3B
		200 dpi bitonal halftone treatment	2BH
		300 dpi bitonal halftone treatment	3BH
		200 dpi grayscale image	2G
		300 dpi grayscale image	3G
		200 dpi color image	2C
		300 dpi color image	3C
H4 Cumbersome volumes, fragile, and/or color materials; cradle required	S3 Pages NTE 11x17 inches	200 dpi bitonal	2B
		200 dpi bitonal halftone treatment	2BH
		200 dpi grayscale image	2G
		200 dpi color image	2C

C.9

SCANNING COMPONENTS - LOT 1 AND LOT 2

C.9.1

Bound Materials - LOT 1 and LOT 2

This section describes the component parts of a book that shall be scanned for both LOT 1 and LOT 2. The delivered set of images shall reflect the following order regardless of the order in which the contractor may actually scan the component parts of the original. In the delivered set of images, each filename shall include a control number. (See C.10 and Section J, Attachment 4, for a description of delivery directory and filenaming requirements.) These control numbers increment in a sequential manner and, thereby, shall establish the sequence of images.

C.9.1.1

Identifying Target

The identifying target shall be the first image for each bound item (see C.3.2).

C.9.1.2

Book Covers

Covers shall be scanned for certain books. When covers are required to be scanned, an instruction will be provided in a note included on the target. If both front and back covers are to be scanned, the front cover image shall be numbered to precede the images for the inside pages and the back cover shall be numbered to follow them. The general rules for cover scanning are as follows:

- Do scan covers (front and/or back) when the cover includes typography or illustrations that are original to the book, and when a legible image can be produced.
- Do not scan the covers of books that will not render a legible image.
- Do not scan covers that are devoid of any marking except the Library's call number.

C.9.1.3

Inside Pages

The images of the inside pages shall come after the images for the target and the front cover (if any). The first page of the book to be scanned shall be the first page containing significant information. Examples include a page containing a copyright stamp that precedes the title page, the title page itself, or end papers containing significant information, such as a map. Scanning of the remainder of the book shall continue in

sequence, omitting blank pages. However, pages that contain no printed information but that contain handwritten inscriptions, notes, marginalia or other written ephemera shall be scanned. End papers shall only be scanned if they contain significant information, such as a map. End papers that are merely decorative shall not be scanned. Blank pages or blank pages with stray pen or pencil marks shall not be scanned.

C.9.1.4

Foldout Pages

Foldout pages present special problems in capture and, if images are segmented, in numbering. These pages shall be removed from book bindings by the Library and scanned by the contractor as unbound pages. They shall be integrated in the delivery sequence of the rest of the bound volume.

C.9.2

Unbound Materials - LOT 1

The identifying target is always the first image scanned for each item identified by the target. If the target represents a folder of an archival collection, the second item to be scanned will be the first sheet in the folder, continuing to the last sheet of the folder, and moving on to the next target and its associated folder. The images shall be named according to the requirements in C.10 and Section J, Attachment 4.

C.10

FILENAMES AND DELIVERY DIRECTORIES - LOT 1 AND LOT 2

The contractor shall assign a digital-image filename to each image captured as part of the initial image-capture process, and deliver these files to the Library in a certain arrangement of directories and subdirectories, following the specifications outlined in Section J, Attachment 4. These are called delivery directories. The filename and directory structure is essential as it will facilitate future access to the images and texts. The contractor shall deliver the images and texts in delivery directories which the Library will archive in repository directories that parallel those created for delivery. These directories and the names of the files they contain provide the structure for the Library's digital repository, the institution's archive of digital information. The directory names and filenames link the images and texts to elements in the Library's collection-retrieval system. The content of the digital repository is stored in UNIX-based servers at the Library of Congress. The Library, however, anticipates production and delivery content using equipment that employs the MS-DOS operating system. In addition, sets of images may be delivered to third parties who use IBM-compatible, DOS-based computers. For this reason, the directory names and filenames shall conform to DOS naming conventions. In order to accommodate UNIX needs, any alphabet letters in the file or directory names shall be lower case. Since filename extensions will be assigned according to file type (e.g., .tif, .jif or .jpg), the first eight characters--the file name proper--

become very important.

C.10.1

Identifiers Used to Name Directories

Specifications for file- and directory-naming are outlined in Section J, Attachment 4. The particular file- and directory names shall be assigned from interpretation of these general specifications. The Library will specify an identifier for a delivery directory. Identifiers are unique names which distinguish one item from another. Under this contract, an item may be any of the following: a book or pamphlet, a folder in a manuscript collection, or a document within a folder of a manuscript collection. An identifier is the prefix or left-side (right-truncated) portion of a name that may contain as many as eight characters. For example, the identifier is bj06 might be used as the basis for assigning the directory names bj06001 (for the first 300 files), bj06002 (for the second 300 files), bj06003 (for the third 300 files), and bj06004 (for the fourth 300 files). Other, similar patterns may also be specified for other identifiers, as outline in Section J, Attachment 4. The identifiers used to name directories also appear in the cataloging or finding-aid data the Library employs in its retrieval systems. When a researcher has found an item of interest in a catalog or finding aid and executes a fetch command, the retrieval system uses the identifier to locate the appropriate repository directory in the Library's digital archive and proceeds to retrieve the appropriate set of image or text files.

C.10.2

File and Directory Structures

Assigning filenames and naming directories for the collections shall be performed according to the four structures identified below and in accordance with the detailed specifications found in Section J, Attachment 4.

1. Unnumbered documents in folder structure
2. Bibliographic record/print-page number structure
    a. When printed page numbers are tracked
    b. When printed page numbers are not tracked
3. Serials structure
    a. When printed page numbers are tracked
    b. When printed page numbers are not tracked
4. Copyright-registration-number and technical-document structure

Identifying targets for each item will identify the naming scheme to be applied to that item.

C.10.3

Feature Recognition

In order to properly assign filenames and enter data into the scanning log, appropriate actions as specified for the various document and collection features listed below shall be taken.

C.10.3.1

New Folders in Manuscript Collections

The start of each new file folder shall be identified during the scanning of folders within a manuscript collection. If not already marked on the folder, a number shall be assigned to the folder. These numbers or names shall be used to properly assign names to delivery directories.

C.10.3.2

New Documents in Manuscript Folders

The beginning of new documents (reports, letters, etc.) shall be identified and "new document" shall be indicated as a feature.

C.10.3.3

Features and Page Numbers in Printed Matter

For some books or other printed matter, the presence of at least four types of features: title pages, tables of contents, lists of illustrations, indexes, and/or cumulative tables of contents or indexes (for serials). In addition, the actual printed page numbers (when present) for certain books or magazines shall also be identified. Special codes shall be used to embed feature-identifiers in the filenames.

C.10.3.4

Derivative Images or Multiple Versions of Entire Page

When derivative images or multiple versions of page images are required, e.g., to successfully reproduce printed halftones and finely inscribed line art in a second image, filenames shall be assigned to the images in accordance with the specifications.

C.10.3.5

Images of Segments of Pages

When multiple segments of a single sheet or page are created, filenames shall be assigned to the images in accordance with the specifications in Section J, Attachment 4.7.

C.10.3.6

Resolution Targets

Resolution targets scanned according to the specifications in C.4.8 and shall be named in accordance with the specifications in Section J, Attachment 4.

C.11

TEXT CONVERSION AND SGML-ENCODING - LOT 1

The Library of Congress encodes converted texts with Standard Generalized Markup Language (SGML) following the Text Encoding Initiative (TEI). Encoding permits the retention of certain elements and features that would be lost in simple word-based ASCII conversion. These include structural elements (front matter, chapters, illustration location) and such features as highlighted text (for example, bold or italics). The retention of these elements and features permits the interchange of texts with reduced loss of meaning, the loading of texts into access software that interprets and displays materials as encoded, and the use of retrieval software that can, for example, give added weight to certain portions of a text. In 1992, the Library developed a Document Type Definition (DTD) for the SGML-encoding of its historical materials. The contractor shall comply with the DTD, Tag Library, and supplementary keying instructions provided by the Library for the conversion of textual materials. The contractor shall synthesize these Library-furnished materials in order to create a single instruction set. The historical documents (American Memory) DTD and associated keying and encoding instructions are provided in Section J, Attachment 6 and Attachment 7.

C.11.1

Character Set

The texts shall be delivered in ISO 646. The IBM-extended characters (letters modified with diacritics), however, shall be coded according to the standard publicly declared entity reference sets in ISO 8879.

C.11.2

Text Conversion and SGML-encoding from Image Sets Scanned by the Contractor

The contractor shall create SGML-encoded, machine-readable texts from image sets that have been scanned under this contract. The contractor shall be responsible for preparing and delivering image sets for conversion; this will include activities such as checking that all required rework has been completed,

integrating rework into image sets, copying image sets onto suitable delivery medium, etc. The contractor shall also be responsible for tracking the progress of conversion work.

C.11.3

Text Conversion and SGML-encoding from Existing Image Sets

The contractor shall create SGML-encoded, machine-readable texts from image sets provided by the Library and not produced under this contract when those image sets meet the image-type and image-quality requirements set forth in this document. These image sets will be provided by the Library on write-once CD-ROM disks in directories and with filenames that meet the requirements set forth in this document. Paper targets to accompany each document represented in the image set will be provided by the Library; these targets will contain all the information needed for the document's text header, as described in the Keying Instructions, Section J, Attachment 7.

The delivered SGML-encoded texts from image sets provided by the Library shall meet the requirements for text provided in preceding sections. If needed for the conversion process, the contractor shall reprocess the image sets or copy them onto other media for that purpose.

Prior to assigning a task order for the conversion of image sets not produced under this contract, the contractor will be given an opportunity to examine the images and media and to determine if the minimum image requirements of this contract can be met.

C.11.4

Texts and Associated Files

All SGML-encoded texts shall be named according to specifications and delivered as ASCII files on the media indicated. Each delivery shall be accompanied by a printed memo and printed directory list. Several types of associated files shall also be provided for each SGML-encoded text: page information group files, reference files, omission report files and ENTITY files. A description of each file follows. (See Section J, Attachment 8, for examples of each.)

C.11.4.1

Page Information Group Files

For every SGML-encoded document, the Library will confirm that: control page numbers match document filenames, control page numbers and print page numbers progress in the proper sequence, and there are no unaccountable variations in the relationship between control page numbers and print page numbers. Therefore, each delivery of SGML-encoded text shall include a set of machine-readable ASCII files, one file for each full-text document, that contains a list of all the page information group tags and

their contents, in the order in which they appear in the document.

C.11.4.2

Reference Files

Pointers to internal and external references in SGML-encoded documents (such as all occurrences of illustration, table, and note reference tags with attributes) shall be reported in a set of machine-readable ASCII files, one file for each full-text document.

C.11.4.3

Omission Report Files

Text that is illegible is marked with an SGML tag to show its placement. A report of the line-number location of any omitted text shall be delivered in a set of machine-readable ASCII files, one file for each full-text document.

C.11.4.4

Entity Files

ENTITY references are used to link to external files. ENTITY references in the SGML file point to an external entity file that lists each ENTITY value, its corresponding filename and MIME type. Therefore, for all converted text a set of machine-readable ASCII files, one file for each full-text document, shall be provided that contains a list of the ENTITY values found in the document plus the filename associated with the ENTITY value.

C.11.5

Customized Error Diagnostic Software and Other Quality Review Tools

Currently no commercially-available off-the-shelf (COTS) software has been determined to be adequate for the full range of quality review activity required to ensure that all conversion requirements are met. Some customization of error diagnostic software may be required to meet the quality review requirements. Any customized error diagnostic software or other automated tools used by the contractor in quality review shall be furnished to the Library for the contract's period of performance at no additional cost. This software (or combination of software) must be able to produce user-friendly output stating errors found and their locations. The contractor shall also provide the Library with instructions for using this software. This software must be provided to the Library before the delivery of the test-batch SGML-encoded texts. Customized additions and modifications to the diagnostic software shall be provided to the Library as they are put into active use by the contractor.

C.12

RELATED SERVICES AND ACTIVITIES - LOT 1 AND LOT 2

C.12.1

Photocopying of Source Material

During the scanning process, certain source materials shall require photocopying. When color pages are scanned as bitonal or grayscale, it will be necessary to produce a photocopy of the original in order to compensate for the scanner's color-blindness. The Library will provide the photocopier when scanning takes place onsite and will permit copying at no cost to the contractor.

C.12.2

Printed Copies of Scanned Images

Printed copies of scanned images are required for the following images.

- Black and white hardcopy of bitonal images and grayscale or color images, halftoned at print-time
- Grayscale hardcopy of grayscale images
- Color hardcopy of color images

The need for printed copies of scanned images will also be specified for the task order (when applicable).

C.12.3

Programming and Processing Activities

The capability to provide different levels of technical expertise is required. It is anticipated that additional programming or processing steps associated with scanning or conversion, modifications to the SGML DTD and related files, and adjustments to the workflow tracking system may be required. These tasks may require different levels of technical expertise, including a processing technician or a computer programmer, and will be specified for task orders as applicable.

C.13

CONTRACT STARTUP AND TESTING ACTIVITY - LOT 1 AND 2

Because of the complexity of the Library's requirements and the variation in the Library's original

materials, the first task to be performed under this contract for both LOT 1 and LOT 2 shall entail the study of a representative cross section of items and the production of a set of test images. For LOT 1, the task will also include the production of a set of SGML-encoded texts. The startup and testing phase shall provide a time during which the contractor and NDLP staff shall work together to address and finalize a mutually agreed upon definition of particular matters related to these technical requirements, such as: the handling of printed halftone illustrations and, for LOT 1 only, the clarification of keying and coding instructions for text conversion and SGML encoding. The startup activity for LOT 1 shall be eight weeks, while the activity for LOT 2 shall be five weeks. The outcome of the startup and testing activity shall 1) establish the specifications for the first task order and 2) provide for the provisional establishment of specifications for other materials likely to be encountered in later tasks under the contract. The startup and testing activities for LOT 1 and LOT 2 will also provide an opportunity for the Library and the contractor to finalize the details of data entry in the Library's workflow tracking system (see C.14).

C.13.1

Representative Types of Materials

During the contract's startup phase, the Library will furnish the following representative examples of the types of materials from which digital images and texts shall be produced. The sample materials will be accompanied by instructions regarding the filenaming and directory structure to be employed.

Furnished for LOT 1

- Approximately 500 pages of material from a manuscript collection. These will be unnumbered documents in file folders.
- 30 pages of material from a copyright-deposit-series collection, e.g., sheet music. These materials will be unbound separate sheets, possibly including left and right pages, to be imaged separately.
- 4 books (approximately 800 pages). 2 books from a local history collection for the states of Michigan, Wisconsin, and Minnesota and 2 books from the Journals of the House of Representatives. These books will serve as a representative sample of bound book collections and both images and SGML-encoded texts will be produced.

The books will be selected to represent the most frequently encountered types for scanning, e.g., books that must be scanned face up with and without a cradle. Furnished for LOT 2

- 1 book (ca. 400 pages) that is large, cumbersome, and fragile.
- 1 book (ca. 200 pages) containing color illustrations.

C.13.2

Startup/Testing Phase

The startup phase for both LOT 1 and LOT 2 shall include the following actions:

Week 1

The Library will make the items listed above available to the contractor at the Library of Congress, along with guidelines for handling, filenaming, etc.

Week 2

The contractor project manager and other contractor designated staff shall meet with the Library project manager (COTR) and other Library staff to discuss the sample materials and delineate the various options for scanning, the SGML markup of text, and the delivery directory structure(s).

The Library's Conservation Office will conduct an orientation session on the safe handling of originals, including use of contractor's book cradle, if applicable.

Week 3-4

The contractor shall deliver and set up scanning equipment in the designated location.

The contractor shall scan the materials in the manner approved during the preceding meetings. The scanned images shall then be forwarded to the Library as both digital files and printed copies for each image.

The contractor and the Library shall install the workflow tracking system. The Library will provide training for its use.

Week 5

The Library will review the digital samples and printed copies and provide a written response to the contractor concerning acceptability, to be followed by discussions that may be needed to resolve any issues.

The contractor shall provide feedback concerning the functionality of installed workflow tracking system, as far as image scanning is concerned. Revisions and adjustments will be discussed.

The startup phase for LOT 1 shall continue with the following additional actions:

Week 6-7

The contractor performs analysis of documents for text conversion and encoding and reports its finding to the Library. After approval by the Library, the contractor proceeds with the conversion of texts to machine-readable form with SGML encoding.

The contractor shall provide feedback concerning the functionality of installed workflow tracking system, as far as text conversion is concerned. Revisions and adjustments will be discussed.

Week 8

The Library will review the sample converted texts and associated files and provide a response to the contractor concerning acceptability. This will be followed by any discussions that may be needed to resolve remaining issues.

C.14

PRODUCTION WORKFLOW, PROCEDURES AND PROJECT MANAGEMENT - LOT 1 AND LOT 2

C.14.1

Workflow Tracking System

By the time of contract award, the Library will have established an electronic tracking system in order to manage interrelated production activities. This system shall consist of a mutually accessible, networked database that is DOS- or Windows-compatible and shall be used by the Library and the contractor via Internet, World Wide Web. The types of data to be entered into the system are provided in Section J, Attachment 9. As production work proceeds, the contractor shall enter the data elements indicated in Attachment 9 into the tracking system.

C.14.2

Pace of Work: Imaging - LOT 1 and LOT 2

C.14.2.1

Images - LOT 1

The contractor shall be capable of producing images at a minimum rate of 5,000 images per week, and a maximum rate of 15,000 images per week. The contractor shall be able to accommodate varying production requirements within this minimum/maximum range. The Library will develop a work plan at the beginning of each task order stating the anticipated pace of scanning for that task or for subtasks within the task.

C.14.2.2

Images - LOT 2

The contractor shall be capable of producing images at a minimum rate of 100 images per week and a maximum rate of 500 images per week. The contents of each task order will include the production rate and the requirements for LOT 2 scanning.

C.14.3

Pace of Work: Text Conversion and SGML-encoding - LOT 1 only

The contractor shall be capable of text conversion and SGML-encoding at a minimum rate 1,000 pages per week and a maximum rate of 10,000 pages per week. The contractor shall be able to accommodate varying production requirements within this minimum/maximum range. The specific pace of conversion work shall be determined for each task order.

C.14.4

Production Batches and Item Directories - LOT 1 and LOT 2

Groups of items shall be scanned in production batches of a size determined for each task order not to exceed the required maximum quantities. Each batch shall consist of items in a single collection. (The collection name is stated on the identifying target (see C.3.2). For example, a set of ten items or 1,000 scanned page-images might be grouped in a single batch. Within a batch, each item's files shall be contained in directories as in C.10.

C.14.5

Scanning Log - LOT 1 and LOT 2

A scanning log shall be kept that includes the elements listed in this section. At a minimum, this log shall indicate the date and general description of the material scanned, as well as noting exceptions, problems, irregularities, and anomalies of the types described in other sections of this document. The log shall also include the identification of the scanning operator and shall identify the particular scanning equipment used. The scanning log may be in machine-readable or paper form. If a machine-readable log is proposed, it shall be in commonly used software (e.g., WordPerfect, Paradox, etc.) and/or delivered as a delimited ASCII or generic word processing file. This log will actively be consulted during the quality review of the materials delivered by the contractor. The Library will also use the log to guide the modification of its cataloging or finding aids by incorporating the log's reports of missing pages, impossible-to-scan documents, and other anomalies.

C.14.6

Periodic Reports - LOT 1 and LOT 2

In addition to the scanning log, the contractor shall submit periodic reports of progress during the course of each task. The timing of such reports will be determined when the specific task is planned; for longer tasks monthly reports may be required. The reports shall provide a narrative that summarizes key events or activities, noting special problems or difficulties encountered, and addressing proposed methods for corrections of such problems as the work continues. The reports shall indicate the agreed-upon project schedule, progress relative to the schedule, and shall clearly state any deviations from the schedule with accompanying explanations. The reports shall note changes in equipment or procedure and provide statistics that indicate the accomplishments of the period described.

C.14.7

Accuracy Requirements: Imaging - LOT 1 and LOT 2

The standard of accuracy for images shall be 99.5%, except for those specifications or image attributes requiring 100% accuracy. For example, a batch of images will be rejected if, in a random sample lot size of 200 images, more than one image is found to be missing, duplicated, illegible, or otherwise defective. Examples of items required to be 99.5% accurate include level of compression, image size, and image quality. Examples of items required to be 100% accurate include content of file headers, file format, and resolution. Images shall be inspected and evaluated by the library in accordance with the American National Standard, general inspection level II (ANSI/ASQC Z1.4-1993 and ANSI/ASQC S2-1995). Except for those specifications requiring 100% accuracy as indicated, images will be inspected in randomly selected samples; the sampling lot size will be determined by the task order production rate, and will be in accordance with the sampling procedures described in the ANSI standards.

C.14.8

Accuracy Requirements: Text Conversion and SGML-encoding -- LOT 1 only

The original materials that the Library intends to digitize consist of varying degrees of legibility. Only materials that are highly legible (primarily printed or typescript materials) shall be converted to machine-readable, SGML-encoded texts. The standard of accuracy for all SGML-encoded texts shall be determined by the Library at contract award, and shall be either 99.95% or 99.995%. Accuracy is based on a character count, including tags, after encoding. For example, an accuracy level of 99.995% means that no more than one (1) wrong character is permitted for any 20,000 characters keyed, roughly one (1) wrong character per ten (10) pages.

C.14.9

Filenames and Delivery Directories - LOT 1 and LOT 2

The Library's requirements for filenaming and delivery directories are described in Section C.10. With the following exceptions all directory names and filenames shall be 99.95% accurate: 1.) new documents in manuscript folders must be identified and embedded into the filenames with 80 percent accuracy and 2.) features and page numbers in printed matter must be identified and embedded into the filenames with 80 percent accuracy.

C.14.10

Contractor Quality Control Program

A quality control program in accordance with the requirements for accuracy and delivery shall be initiated, documented, and maintained throughout the life of this contract. The Library expects that the contractor shall perform quality control for 100 percent of deliverables. A specific quality control plan shall be implemented for each phase of contract performance beginning with capture of document images through text conversion and ultimate acceptance by the Library of all deliverables. In addition, the contractor shall be responsible for inspecting the accuracy of filenames and directories for all digital images, texts and associated files produced under this contract. Inspection hardware and software shall be of appropriate quality, accuracy, and quantity to ensure that all requirements of this contract are met. The contractor shall document all quality control procedures, including actions taken to correct any problems, and submit a quality control report along with (or as a part of) the scanning log with each delivery to the Library. This quality control report must enumerate and describe actions taken. C.14.11 Contractor Quality Review: Imaging - LOT 1 and LOT 2 The contractor shall perform sufficient image inspection to ensure that deliveries of images to the Library meet the acceptance criteria. Contractor quality review shall include, but is not limited to, the following types of activities:

C.14.11.1

Image Quality.

The contractor shall ensure that image quality meets the acceptance criteria. For example:

- complete page content has been captured
- images are not skewed, blurred or indistinct
- correct treatment has been applied to printed halftones
- image size, level of compression, page orientation, and image resolution are correct

C.14.11.2

Document Integrity.

In addition to ensuring that the complete page content has been captured, the contractor shall ensure that the complete source document has been scanned according to instructions provided, and that special instructions relating to specific collections or materials have been followed. This includes ensuring that:

- images are produced for every required page and that no pages are missing
- page images have not been duplicated during the scanning process
- page images are numbered and delivered in the order they appear in the source document unless otherwise instructed
- segmented items conform to the scanning instructions provided

C.14.11.3

Completeness of Scanning Logs.

The contractor shall ensure that scanning logs are completed and maintained in accordance with instructions provided.

C.14.12

Contractor Quality Review: Text Conversion and SGML-encoding - LOT 1 only

The contractor shall review the quality of all SGML-encoded texts before delivery to the Library. The contractor shall correct any errors that can be resolved by reference to the Library's DTD, Tag Library, or supplementary keying instructions before delivering SGML-encoded texts to the Library. However, it will be acceptable for the contractor to deliver to the Library SGML-encoded texts with errors or anomalies that cannot be resolved through the normal process if 1) those errors or anomalies are documented in a memo from the contractor to the Library; and 2) the contractor then applies whatever action is necessary to resolve those errors or anomalies after consultation with Library staff.

C.14.12.1

DTD Implementation.

The contractor shall ensure that the implementation of the American Memory DTD conforms to all the requirements described in the Library's instructions. This shall include confirming that document features have been tagged properly, that attributes are correctly assigned for physical text features such as italics or bold, and that special text such as handwritten or stamped is correctly identified.

C.14.12.2

Pre-parsing review.

Before parsing, the contractor shall review several features of the encoded documents. Any errors or anomalies found in this review shall either be corrected before delivery to the Library or reported to the Library in a memo, as described above. Document features that shall be reviewed before parsing and delivery include: header contents, document filenames and identity, the order of control page numbers and print page numbers, the relationship between control page numbers and print page numbers, the padding of control page numbers to the correct number of digits, and the correct ENTITY values for page images, tables and illustrations match the appropriate filenames.

C.14.12.3

Parsing.

The contractor shall ensure that all SGML-encoded texts parse in three (3) different validating parsers which have been approved by the Library prior to award.

C.14.13

Project Management

At the Library of Congress, the Contracting Officer's Technical Representative (COTR) will manage and coordinate this effort, while the contractor's project leader shall perform a similar function for the contractor. The COTR and the contractor's project leader will serve as the principal points of technical communication between the two organizations. The objectives of the project management approach are:

- To ensure detailed forward planning for work breakdown and schedules at the task level and to ensure adequate, timely resource requirements planning
- To report contract performance on an accurate and objective basis and to identify any problems or issues which may arise during performance of a task order as early as possible.

The contractor shall provide project management resources sufficient to ensure consistent production flow levels of images and text, and to ensure that all employees, including new employees, are fully trained in safe handling and project-related procedures.

The contractor shall provide schedules for project implementation at the start of each task order, including project startup. These project schedules shall indicate milestones against which progress shall be monitored and evaluated, and shall be updated on a regular basis to be determined at the start of each task order.

The contractor shall ensure that sufficient corporate resources exist within the contractor's organization to provide technical and management support and backup to the proposed project team as required.

C.14.14

Key Personnel

For purposes of this contract, key contractor personnel are defined as follows:

Lot 1 and Lot 2

project manager and designated alternate
digital scanning personnel
quality assurance inspector(s)
imaging engineer(s) or scientist(s)

Lot 1 only

SGML expert-specialist(s)

Project Manager -

At least five years of proven, applicable project management experience on large, complex project management efforts involving ten or more team members. Must have proven experience working with digital imaging and SGML. The contractor's project manager or designated alternate shall have full authority to represent the contractor in all matters regarding this contract.

Digital scanning personnel -

At least two of the proposed digital scanning personnel must have at least three years of proven experience in using scanning equipment and software relevant to this project. All other digital scanning personnel must have at least one year of applicable experience in using scanning equipment and software relevant to this project. All digital scanning personnel proposed by the offeror are considered to be key personnel.

Quality assurance inspector(s) -

At least one of the proposed quality assurance inspectors must have at least two years of proven experience performing quality review of images (LOT 1 and LOT 2). At least one of the proposed quality assurance inspectors must have at least two years of proven experience performing quality review of SGML-encoded text (LOT 1 only). All quality assurance inspectors proposed by the offeror are considered to be key personnel.

Imaging engineer(s) or scientist(s) -

At least one of the individuals proposed must have at least five years of proven technical experience in imaging technology, including strong knowledge and experience with the imaging requirements described in Section C, and with hardware and software relevant to this procurement.

SGML expert-specialist(s) -

(LOT 1 only) At least one of the individuals proposed must have a minimum of five years of proven experience with the conversion of texts to machine-readable form; a minimum of five years of proven experience using SGML and working with DTDs; and demonstrated knowledge of SGML editing packages and related software. At least one of the proposed individuals must have a minimum of three years experience writing/creating DTDs. At least one of the proposed individuals must have a minimum of one year of proven experience working with the SGML Text Encoding Initiative (TEI).

C.15

DELIVERABLES AND DELIVERY - LOT 1 AND LOT 2

C.15.1

Workflow Tracking System

The Library will install and the contractor will enter data concerning the progress of batches of materials through the workflow process (see C.14.1).

C.15.2

SGML Error Diagnostic Software - LOT 1 Only

The error diagnostic software used to perform quality review of SGML encoded texts described in C.11.5 shall be delivered before the delivery of the first batch of SGML-encoded texts (which are part of the startup activity).

C.15.3

Delivery Sequence

The work for each job executed under the terms of this contract shall be presented in three major deliveries:

C.15.3.1

Test Samples (when applicable)

Those digital images (LOT 1 and LOT 2) or machine-readable, SGML-encoded texts and associated files (LOT 1 only) related to the job analysis and proposal prior to issuance of task order. If the group of samples will fit on 10 floppy disks or less, 3.5-inch, IBM- compatible floppy disks may be used. Alternatively, and as a requirement if the sample data exceeds the capacity of 10 floppy disks, the samples shall be furnished on a write-once CD-ROM.

C.15.3.2

Main delivery

This will consist of one or more write-once CD-ROMs. The job may entail the scanning, conversion and SGML encoding of texts and delivery of batches [as discussed in Section D.] These first-delivery CD-ROMs are referred to as alpha disks, meaning that they are the first delivery of the image sets. They will be retained by the Library. LOT 1 Only: Images and their SGML texts shall be delivered separately. Images must be approved by the Library before they are sent for conversion and coding.

C.15.3.3

Rework

Unacceptable digital images or machine-readable, SGML-encoded texts and associated files (LOT 1 only) shall be delivered as rework. The rework may be delivered on floppy disks, on a separate, write-once CD-ROM, or if multi-session format is used, on the disk containing the original delivery. These are referred to as rework disks, meaning that they contain reworked versions of images or texts that failed in the first delivery. Rework for each batch shall be delivered separately and labeled "rwxxx," where xxx is the number of the original delivery batch. For example, rework for original batch "125" shall be labeled "rw125."

C.15.4

Write-once CD-ROM Disks

As outlined in the subsections that follow, deliveries other than those of small sample batches shall be made on write-once CD-ROM compatible with ISO 9660 specifications and containing DOS files in DOS directories. The disks may be in a single-session or multi-session format. Each CD-ROM and

accompanying jewel case shall be labeled with the collection or job names, disk (volume) name (within the job series), date completed, and the indicator "Library of Congress/NDLP."

C.15.5

Alternate Delivery Media

Alternate delivery media, e.g., 8mm TAR tapes readable on IBM RS-6000 computers running the AIX version 3.2.5 operating system, or delivery of images by file transfer protocol (ftp) which would permit images to be loaded into directories and subdirectories in servers at the Library may be acceptable as negotiated and determined prior to contract award. Consideration of the alternatives will take into account compatibility with the Library's existing systems.

C.15.6

Shipping/Packing List Form

Each shipment of digital images delivered to the Library shall include an itemized packing list. Each shipment of digital files on CD-ROMs shall be accompanied by the scanning log covering that shipment, together with directory and filename lists for the disk.

C.15.7

Return of Government Furnished Materials (If Applicable)

All products developed under this contract shall belong to the U.S. Government, including the proprietary right therein. (See H.1, Release, Publication, and Use of Government Furnished Data, Page H-1) The contractor shall return to the Library any original materials supplied. Although the contractor may retain copies of the digital scanned files created as working backups, at the end of the contract period, the contractor shall erase or destroy all backups or duplicate files and materials. Any intermediate materials produced in the course of preparing the required images shall be delivered to the Library. This may include intermediate film copies, or other output. These intermediate materials shall be labeled in a systematic way. Documentation in the form of logs or inventory sheets shall be supplied.

Next.....Previous.....Return to Section B Table of Contents.....Return to the Table of Contents

SECTION D

PACKAGING AND MARKING

D.1

PACKING AND MARKING

Materials being returned to the Library and the CD-ROMs (or other delivery media) containing the digital images and text files shall be packed in labelled cartons in accordance with the best commercial practices that meet the packing requirements of the carrier and ensure safe delivery at the destination. See Section F for the shipping address and proper procedures for delivery. Each shipment of digital files on CD-ROMs shall be accompanied by an itemized packing list. Each shipment of books shall be accompanied by an itemized list of titles and call numbers.

Next.....Previous.....Return to the Table of Contents

SECTION E
INSPECTION AND ACCEPTANCE

E.1 NOTICE LISTING CONTRACT CLAUSES INCORPORATED BY REFERENCE

NOTICE: The following solicitation provisions and/or contract clauses pertinent to this section are hereby incorporated by reference:

FEDERAL ACQUISITION REGULATION (48 CFR CHAPTER 1)

52.246-2 INSPECTION OF SUPPLIES--FIXED PRICE (JUL 1985)
52.246-4 INSPECTION OF SERVICES--FIXED PRICE (FEB 1992)
52.246-16 RESPONSIBILITY FOR SUPPLIES (APR 1984)

E.2 INSPECTION AND ACCEPTANCE

The Library of Congress reserves the right to have the Contracting Officer or designated COTR inspect the contractor's facilities during the actual production of digital files, including work and storage areas, whether these areas be located at the contractor site or on Library premises.

The contractor is responsible for performing all inspections or evaluations of all digital files, file names, and directory names during production and prior to delivery to the Library. All unacceptable images, filenames, or directory names or entire batches shall be corrected at no additional cost to the Library.

The Library will require three (3) weeks to perform inspections for an average batch size of 1,000 - 1,200 images or 1,500 pages of SGML-encoded text.

E.3 CONTRACTOR QUALITY REVIEW OF DIGITAL IMAGES

The contractor is required to perform a comprehensive quality review of all digital images, file names, and directory names before delivery to the Library to ensure an acceptable level of quality.

E.4 LIBRARY QUALITY REVIEW OF DIGITAL IMAGES

Images, file names, and directory names shall be inspected and evaluated by the Library. The Library's inspection and evaluation shall be in accordance with sampling procedures described in the American National Standard, general inspection level II (ANSI/ASQC Z1.4-1993 and ANSI/ASQC S2-1995). The sampling lot size will be determined by the task order production rate, and will be in accordance with the ANSI standard.

E.4.1 Rejection Procedures for Digital Images

Delivery media - All delivery media will be inspected to ensure that the requirements stated in Section C are met. Any delivery media or files which are non-functional in the Library's systems shall be rejected. If there is a consistent failure in loading of samples, the entire batch will be rejected. Otherwise, if isolated images fail, the Library will prepare a list and return those images for correction.

Images - These shall be evaluated and inspected in accordance with the standards indicated in E.4 above, with random sampling lot sizes determined by the task order production rate, except for those specifications requiring 100% accuracy as indicated. A batch will be rejected if, in a given random sample lot size, more than one digital image per 200 sample images is found to be missing, duplicated, illegible, or otherwise defective. This constitutes a 99.5% accuracy rate. In this event, the entire batch will be returned to the contractor for corrections.

Examples of items required to be 99.5% accurate include:

- file and image characteristics: level of compression and image size
- image quality: blurred or indistinct image, loss of distinct features or lines, incomplete capture of page content, skewing, failure to apply treatment to printed halftones
- other: failure to capture illustration captions, missing images, duplicate images, images out of order

Examples of items required to be 100% accurate include:

- Content of file headers and tags
- File format
- Compression algorithm
- Resolution
- Pixel depth

E.5 CONTRACTOR QUALITY REVIEW OF SGML-ENCODED TEXTS AND ASSOCIATED FILES

The contractor is required to perform a quality review of all SGML-encoded texts before delivery to the Library. The contractor will correct any errors that can be resolved by reference to the Library's DTD, the tag library, or supplementary keying instructions before delivery of SGML-encoded texts to the Library. If there are errors or anomalies that cannot be resolved by normal process, it shall be acceptable for the contractor to deliver a questionable converted text with the following requirements: a.) the contractor shall document errors or anomalies in a memo to the Library, and b.) the contractor, after consultation with the Library staff, shall take whatever action necessary to resolve the errors or anomalies.

E.6 LIBRARY QUALITY REVIEW OF SGML-ENCODED TEXTS AND ASSOCIATED FILES

SGML-encoded texts and associated files shall be inspected and evaluated by the Library using sampling procedures in accordance with the American National Standard, general inspection level II (ANSI/ASQC Z1.4-1993 and ANSI/ASQC S2-1995).

E.6.1 Rejection Procedures for SGML-encoded Texts and Associated Files

When SGML-encoded texts and associated files do not conform to the Library's quality requirements, they may be rejected and returned to the contractor for corrections at no cost to the Library. SGML-encoded texts may be rejected for any of the following conditions:

Delivery media: If the delivery media or any files on the media are nonfunctional in the Library's systems, they shall be returned to the contractor for reinspection, remastering, or other necessary corrections(s).

Conformance to the Library's DTD: If any single file in a SGML-encoded text batch does not parse on the Library's parser, the batch shall be returned to the contractor for reparsing and any other necessary correction(s).

The standard of accuracy for all SGML-encoded texts shall be determined by the Library at contract award and shall be either 99.95 percent or 99.995. Accuracy is based on a character count, including tags, after encoding. If tags are incompletely or incorrectly applied, including misspelled or incorrect attribute values, to a degree below the contracted accuracy level, the batch shall be returned to the contractor for reexamination and correction.

Completeness and accuracy of key information: If any key information in SGML-encoded text and associated ENTITY files are not completely and accurately captured to a rate of 100 percent, a batch shall be returned to the contractor for correction. Key information includes:

- Header information defined in task order for each collection, including doctype statement, title, document identifier, and bibliographic data.
- Entity and link references including page information group entity values attached to elements, illustration and table entity values attached to and, respectively and note identifier values attached to tags.
- Entity files listing the ENTITY value, its corresponding filename and MIME type.

Accuracy of keying: The standard of accuracy for all SGML-encoded texts shall be determined by the Library at contract award and shall be either 99.95 percent or 99.995. Accuracy is based on a character count, including tags, after encoding. For example, an accuracy level of 99.995 percent means that no more than one wrong character is permitted for any 20,000 characters keyed, roughly one wrong character per ten pages. If accuracy falls below the contracted level, the batch shall be returned to the contractor.

E.7 CONTRACTOR QUALITY REVIEW OF FILE AND DIRECTORY NAMES

The contractor is required to perform a comprehensive quality review of all digital images, file names, and directory names before delivery to the Library to ensure an acceptable level of quality.

E.8 LIBRARY QUALITY REVIEW OF FILE AND DIRECTORY NAMES

A batch shall be rejected if the directory and file names for images, texts, and associated files do not follow the requirements. Directories for each delivered batch will be examined for 99.95 percent accuracy to determine whether the directory names and file names follow requirements for images, texts, and associated files.

Next.....Previous.....Return to the Table of Contents

SECTION F
DELIVERIES OR PERFORMANCE

F.1 NOTICE LISTING CONTRACT CLAUSES INCORPORATED BY REFERENCE

NOTICE: The following solicitation provisions and/or contract clauses pertinent to this section are hereby incorporated by reference:

FEDERAL ACQUISITION REGULATION (48 CFR CHAPTER 1)

52.212-13 STOP-WORK ORDER	AUG 1989
52.247-34 F.O.B. DESTINATION	NOV 1991

The period of performance shall begin upon contract award (anticipated to be approximately October) and shall continue until completion and acceptance of all tasks and deliverables. Four (4) one (1) year options for continued performance of tasks orders are available. Exercising of the option years is dependent upon satisfactory performance, continuing need, and the availability of funding.

F.3 TASK ORDERS

Tasks under this contract with the exception of the initial contract startup/testing phase (which will be obligated at time of award) shall be performed through the issuance of phased task orders. The period of performance and delivery dates will be established with each order. For each new task order, the COTR will made available to the contractor the documents to be analyzed and through the Contracting Officer will issue a request outlining required activities and deliverables for a task order proposal. The contractor will be given a minimum of five (5) working days' notice of the Library's intention to request analysis for a new task order. The contractor shall submit a technical proposal in response to each request within the timeframe specified. The proposal shall include a detailed description of the work to be accomplished (work plan); the batch sizes for deliverables and completion dates (milestone chart); the required inputs by the Library; and other information deemed appropriate. A cost proposal in accordance with Section B, The Schedule, shall be submitted with the response. After review and approval of the proposal, the Contracting Officer may issue the task order. The Library reserves the right to decline to issue a specific task order to the contractor after reviewing the contractor's proposal. No reimbursement shall be made for preparation of task proposals. After issuance of a task order, no changes in scope of work, or changes in delivery dates shall be undertaken without the explicit authorization of the Contracting Officer.

F.4 SCHEDULING DELIVERIES

It is the responsibility of the contractor to insure that arrival of shipments at the Library occur between the hours of 6:30 a.m. and 4:00 p.m., Monday through Friday excluding Federal holidays. (See also

Section D)

F.5 52.211-8 TIME OF DELIVERY. (JUL 1995)

(a) The Government requires delivery to be made according to the processing/production rates for digital images as indicated below:

REQUIRED DELIVERY SCHEDULE

LOT 1 -- minimum of 5,000 to a maximum of 15,000 digital images per week and text conversion encoding at a minimum rate of 1,000 pages per week and a maximum rate of 10,000 pages per week for.

LOT 2 -- minimum of 100 to a maximum of 500 digital images per week.

F.5.1 Contract Startup/Testing Phase (CLIN B.5.08 and C.13)

Weeks After Contract Award

LOTS 1 AND 2

1 .....

Initial meeting of COTR and contractor project leader

2 .....

Library defines first job within contract, holds meeting at Library with contractor for analysis of materials to be scanned and converted.

Safe Handling training at the Library

Scanning commences

4 .....

Completion of scanning and delivery of digital images to the Library Contractor provided customized diagnostic software

5 .....

Library review and acceptance of sample images.

6 .....

Meeting at the Library for final resolution and discussion of remaining issues regarding images

(LOTS 1 and 2) LOT 1

7 .....

Completion of SGML-encoding of texts and delivery of texts and associated files to the Library

8 .....

Library review and acceptance of SGML-encoded texts Meeting at the Library for final resolution and discussion of remaining issues.

F.5.2 Typical Task Order Schedule

This contract shall proceed on a task order basis. The detailed schedule for each separate job shall be determined and approved by the Library in specific planning meetings with the contractor. The general pattern for jobs will be approximately as follows.

Week ..... Action

LOTS 1 AND 2

Weeks 1-2 .....

Library defines task

Weeks 3-4 .....

Contractor completes analysis of material by inspection at the Library, presents a proposal to the Library in which they recommend methods and technical requirements for that task to the Library.

Week 5 .....

Library responds to the proposal. [If additional analysis required, two additional weeks will be permitted, followed by an additional two weeks for Library response.]

Weeks 6-7 .....

Contractor begins scanning batch one in the task, on- or off-site as indicated by the Library. Contractor begins and completes off-site processing. Processing includes contractor's post-scanning steps, e.g., assigning final names to files, quality review, etc. A typical batch will consist of from one to two week's scanning work performed by a single scanning team and processing by the contractor.

Week 8 .....

Delivery of digital files for batch one images and associated materials to Library (2 weeks after start of scanning of this batch) Contractor begins scanning and processing batch two in the job. Tasks related to batch two and subsequent batches will follow the same schedule as that of batch one in the job.

Week 11 .....

Completion of quality review by Library (3 weeks after delivery of batch to Library) including notifying contractor of rejected files.

Week 13 .....

Completion of rework for images that do not meet job specifications

LOT 1

Contractor begins text conversion of those materials designated by the Library.

Week 16 .....

Delivery of SGML-encoded texts and associated files for batch one to Library (10 weeks after start of scanning of this batch)

Week 19 .....

Completion of quality review by Library (3 weeks after delivery of batch to Library) including notifying contractor of rejected files.

NOTE: Additional batches continue concurrently as needed to complete job on pattern above:

LOTS 1 AND 2: two weeks to scan and process, three weeks to review, two weeks for rework,

LOT 1 continues: three weeks for text conversion, three weeks for review of text conversion, and two weeks for rework on converted materials.

F.5.2 Follow-On Task Orders

Analysis of materials and task proposal preparation and response may vary for each task order. Precise delivery dates and batch sizes will be determined for each task order and may vary based upon the difficulty inherent in the materials being digitized. Requests for subsequent task proposals may overlap performance on a task order in progress.

OFFEROR'S PROPOSED DELIVERY SCHEDULE -----

ITEM NO.	QUANTITY	WITHIN DAYS AFTER DATE OF CONTRACT

(b) Attention is directed to the Contract Award provision of the solicitation that provides that a written award or acceptance of offer mailed, or otherwise furnished to the successful offeror, results in a binding contract. The Government will mail or otherwise furnish to the offeror an award or notice of award not later than the day award is dated. Therefore, the offeror should compute the time available for performance beginning with the actual date of award, rather than the date the written notice of award is received from the Contracting Officer through the ordinary mails. However, the Government will evaluate an offer that proposes delivery based on the Contractor's date of receipt of the contract or notice of award by adding:

(i) five calendar days for delivery of the award through the ordinary mails; or

(ii) one working day if the solicitation states that the contract or notice of award will be transmitted electronically. (The term "working day" excludes weekends and U.S. Federal holidays.) If, as so computed, the offered delivery date is later than the required delivery date, the offer will be considered nonresponsive and rejected.

F.6 PLACE OF DELIVERY (F.O.B. DESTINATION)

Supplies and/or services shall be delivered F.O.B. destination to:

Library of Congress
National Digital Library Program
c/o Freight Services
Madison Building Loading Dock
100 C Street SE Washington, DC 20540-20003
Freight Services Telephone: 202-707-5558

Next.....Previous.....Return to the Table of Contents

SECTION G
CONTRACT ADMINISTRATION DATA

G.1 INVOICES

Invoices shall be submitted in an original and two copies to the:

Library of Congress
FSD/AD/AOS (9112)
101 Independence Avenue, S.E.
Washington, DC 20540-9112

To constitute a proper invoice, the invoice must include the following information and/or attached documentation:

(1) Name, address, and vendor identification of business concern;
(2) Invoice data;
(3) Contract number, or other authorization for delivery of property or services (including order number and contract line item number); if contract modifications are issued, the modification number in block #3 of the purchase order must be included;
(4) Description, quantity, unit of measure, unit price and extended price of supplies delivered or services performed;
(5) Shipping and payment terms (e.g., shipment number and date of shipment, prompt payment discount terms). Bill of lading number and weight of shipment will be shown for shipments on Government bills of lading;
(6) Name and address of contractor official to whom payment is to be sent (must be the same as that in the contract or in a proper notice of assignment);
(7) Name (where practicable), title, phone number, and mailing address of responsible official to be notified in event of a defective invoice; and
(8) Any other information or documentation required by other requirements of the contract (such as evidence of shipment).

G.2 PAYMENT DUE DATE

The due date is the date specified in the contract, or if no due date is specified in the contract, the due date shall be considered to be the later of the following two events:

(1) the 30th day from receipt of a proper invoice, or;
(2) the 30th day after the acceptance of supplies delivered or services performed by the contractor.

G.3 TECHNICAL DIRECTION

The Contracting Officer's Technical Representative (COTR) will provide technical direction on contract performance. Technical direction includes: (See also H.6)

(1) Direction to the Contractor to assist in accomplishing the requirements as indicated in the Statement of Work.
(2) Comments on and approval of reports and/or other deliverables.

G.4 52.232-28 ELECTRONIC FUNDS TRANSFER PAYMENT METHODS (APR 1989)

Payments under this contract will be made by the Government either by check or electronic funds transfer (through the Treasury Fedline Payment System (FEDLINE) or the Automated Clearing House (ACH), at the option of the Government. After award, but no later than 14 days before an invoice or contract financing request is submitted, the Contractor shall designate a financial institution for receipt of electronic funds transfer payments, and shall submit this designation to the Contracting Officer or other Government official, as directed.

(a) For payment through FEDLINE, the Contractor shall provide the following information:
(1) Name, address, and telegraphic abbreviation of the financial institution receiving payment.
(2) The American Bankers Association 9-digit identifying number for wire transfers of the financing institution receiving payment if the institution has access to the Federal Reserve Communications System.
(3) Payee's account number at the financial institution where funds are to be transferred.
(4) If the financial institution does not have access to the Federal Reserve Communications System, name, address, and telegraphic abbreviation of the correspondent financial institution through which the financial institution receiving payment obtains wire transfer activity. Provide the telegraphic abbreviation and American Bankers Association identifying number for the correspondent institution.

(b) For payment through ACH, the Contractor shall provide the following information:
(1) Routing transit number of the financial institution receiving payment (same as American Bankers Association identifying number for FEDLINE.
(2) Number of account to which funds are to be deposited.
(3) Type of depositor account ("C" for checking, "S" for sayings).
(4) If the Contractor is a new enrollee to the ACH system, a "Payment Information Form," SF 3881, must be completed before payment can be processed.

(c) In the event the Contractor, during the performance of this contract, elects to designate a different financial institution for the receipt of any payment made using electronic funds transfer procedures, notification of such change and the required information specified above must be received by the appropriate Government official 30 days prior to the date such change is to become effective.

(d) The documents furnishing the information required in this clause must be dated and contain the signature, title, and telephone number of the Contractor official authorized to provide it, as well as the Contractor's name and contract number.

(e) Contractor failure to properly designate a financial institution or to provide appropriate payee bank account information may delay payments of amounts otherwise properly due.

G.5 PAYMENTS

Payments will be made monthly after satisfactory completion, inspection, and acceptance of the digital images (batch/lots) or as determined for each task order.

Next.....Previous.....Return to the Table of Contents

SECTION H
SPECIAL CONTRACT REQUIREMENTS

H.1 RELEASE, PUBLICATION, AND USE OF GOVERNMENT FURNISHED DATA

No contractor shall have the right to use, release to others, reproduce, distribute, or publish any government furnished data first produced or specifically used by the contractor in the performance of this contract with prior written permissions from the Library of Congress.

H.2 INTERPRETATION OF CONTRACT REQUIREMENTS

No interpretation of any provisions of this contract, including applicable specifications, shall be binding on the Library of Congress unless furnished or agreed to in writing by the Contracting Officer.

H.3 CONTRACTOR COMMITMENTS, WARRANTIES, REPRESENTATIONS

Any written commitment by the Contractor within the scope of this contract shall be binding upon the Contractor. Failure of the Contractor to fulfill any such commitment shall render the Contractor liable under the default provisions for damages due to the Library of Congress under the terms of this contract. For the purpose of this contract, a written commitment by the Contractor is limited to the proposal submitted by the Contractor, and to specific written amendments to its proposal. Written commitment by the Contractor are further defined as including (1) any warranty or representation made by the Contractor in a proposal as to performance, (2) any warranty or representation made by the Contractor described in (1) above, made in any literature descriptions, drawings, or specifications accompanying or referred to in a proposal, and (3) any modification of or affirmation or representation as to the above which is made by the Contractor in or during the course of negotiations, whether or not incorporated into a formal amendment to the proposal.

H.4 USE OF LIBRARY OF CONGRESS NAME OR CONTRACTUAL RELATIONSHIPS IN ADVERTISING

The Contractor agrees not to refer to awards from or contracts with the Library of Congress in commercial advertising in such a manner as to state or imply that the product or service provided is endorsed or preferred by the Library or is superior to other products or services. The Contractor also agrees not to distribute or release any information which states or implies that the Library of Congress endorses, uses, or distributes the Contractor's product or service.

H.5 NEWS RELEASE

No news release pertaining to this contract will be made without prior agency approval, as appropriate,

and then only in coordination with the Contracting Officer.

H.6 CONTRACTING OFFICER'S TECHNICAL REPRESENTATIVE (COTR)

The Contracting Officer will designate, in writing, an authorized representative(s) to discharge such duties and responsibilities as may be delegated to him. The representative (s) will not have authority to change or alter any of the terms and conditions of the contract. The Contracting Officer is the sole authority to make changes in the contract. The contractor will be furnished a copy of the COTR delegation.

H.7 KEY PERSONNEL REQUIREMENTS

(A) Certain skilled experienced professional and/or technical personnel are essential for successful contractor accomplishment of the work to be performed under this contract. These are defined as "Key Personnel" and are those persons whose resumes were submitted for evaluation of the proposal. The contractor agrees that such personnel shall not be removed from the contract work or replaced without compliance with paragraphs (b) and (c) hereof.

(B) If one or more of the key personnel for whatever reason becomes, or is expected to become, unavailable for work under this contract for a continuous period exceeding thirty (30) work days, or is expected to devote substantially less effort to the work than indicated in the proposal or initially anticipated, the contractor shall immediately notify the Contracting Officer and shall, subject to the concurrence of the Contracting Officer or his authorized representative, promptly replace such personnel with personnel of at least substantially equal ability and qualifications.

(C) All requests for approval of substitutions hereunder must be in writing and provide a detailed explanation of the circumstances necessitating the proposed substitutions. They must contain a complete resume for the proposed substitute, and any other information requested by the Contracting Officer or needed by him to approve or disapprove the proposed substitution. The Contracting Officer or his authorized representative will evaluate such requests and promptly notify the contractor of his approval or disapproval thereof in writing.

(D) If the Contracting Officer determines that suitable and timely replacement of key personnel who have been reassigned, terminated or have otherwise become unavailable for the contract work is not reasonably forthcoming or that the resultant reduction of productive effort would be so substantial as to impair the successful completion of the contract or the services ordered, the contract may be terminated by the Contracting Officer for default or for the convenience of the Government, as appropriate, or, at the discretion of the Contracting Officer if he finds the contractor at fault for the condition, the contract price or fixed fee may be equitably adjusted downward to compensate the Government for any resultant delay, loss, or damage.

H.8 REPRESENTATIONS AND CERTIFICATIONS

In accordance with FAR 15.406-1(b), "Representations, Certifications, and Other Statement of Offerors" (as executed by the Contractor and included in its response to the Library's Request for Proposal), are

incorporated and made a part of this contract.

H.9 REQUIREMENT FOR CONTRACTOR EMPLOYEES WHOSE WORK ON THIS PROJECT REQUIRES ACCESS TO LIBRARY BUILDINGS

Personnel provided under this contract shall not be under pending charges, shall have not been convicted of any felony within the last 10 years, or any misdemeanor within 5 years, excepting minor motor vehicle infractions for which the individual paid a fine or posted collateral in the amount of $300 or less. Note that the term "conviction" would include a disposition of "probation" or "probation before judgement." Should any person employed by the contractor to perform work under this contract be convicted of any of the aforesaid offenses, the contractor agrees to remove the individual from the contract performance and return all Library building and stack passes issued to the individual. The contractor also agrees to remove from the contract performance any individual under pending charges for any felony or misdemeanor with the exceptions noted above until such time as the final disposition is known. Upon request of the Library, the contractor shall identify personnel to be assigned to work under the contract and submit a FD-258 (contractor fingerprint chart) and any other necessary administrative forms provided by the Library so that a background check may be conducted. The parties agree that the Library has final authority to determine the suitability of contractor personnel who perform work under this contract. Nevertheless, the fact that the Library may conduct background checks on assigned contractor personnel does not relieve the contractor of the responsibility to provide qualified, reliable personnel of sound character and conduct.

Next.....Previous.....Return to the Table of Contents

SECTION I
CONTRACT CLAUSES

I.1 52.252-2 CLAUSES INCORPORATED BY REFERENCE. (JUN 1988)

This contract incorporates one or more clauses by reference, with the same force and effect as if they were given in full text. Upon request, the Contracting Officer will make their full text available.

52.202-01	DEFINITIONS	OCT 1995
52.203-03	GRATUITIES	APR 1984
52.203-05	COVENANT AGAINST CONTINGENT FEES	APR 1984
52.203-06	RESTRICTIONS ON SUBCONTRACTOR SALES TO THE GOVERNMENT	OCT 1995
52.203-07	ANTI-KICKBACK PROCEDURES	JUL 1995
52.203-10	PRICE OR FEE ADJUSTMENT FOR ILLEGAL OR IMPROPER ACTIVITY	SEP 1990
52.203-12	LIMITATION ON PAYMENTS TO INFLUENCE CERTAIN FEDERAL TRANSACTIONS	JAN 1990
52.209-06	PROTECTING THE GOVERNMENT'S INTEREST WHEN SUBCONTRACTING WITH CONTRACTORS DEBARRED, SUSPENDED, OR PROPOSED FOR DEBARMENT	AUG 1995
52.215-22	PRICE REDUCTION FOR DEFECTIVE COST OR PRICING DATE	OCT 1995
52.215-24	SUBCONTRACTOR COST OR PRICING DATA	OCT 1995
52.215-26	INTEGRITY OF UNIT PRICES	OCT 1995
52.215-27	TERMINATION OF DEFINED BENEFITS PENSION PLANS	MAR 1996
52.215-30	FACILITIES CAPITAL COST OF MONEY	SEP 1987
52.215-33	ORDER OF PRECEDENCE	JAN 1986
52.215-40	NOTIFICATION OF OWNERSHIP CHANGES	FEB 1995
52.222-20	WALSH-HEALEY PUBLIC CONTRACTS ACT	APR 1984
52.222-26	EQUAL OPPORTUNITY	APR 1984
52.222-35	AFFIRMATIVE ACTION FOR SPECIAL DISABLED AND VIETNAM ERA VETERANS	APR 1984
52.222-36	AFFIRMATIVE ACTION FOR HANDICAPPED WORKERS	APR 1984
52.222-37	EMPLOYMENT REPORTS ON SPECIAL DISABLED VETERANS AND VETERANS OF THE VIETNAM ERA	JAN 1988
52.223-02	CLEAN AIR AND WATER	APR 1984
52.223-06	DRUG-FREE WORKPLACE	JUL 1990

52.225-03	BUY AMERICAN ACT - SUPPLIES	JAN 1994
52.227-01	AUTHORIZATION AND CONSENT	JUL 1995
52.227-02	NOTICE AND ASSISTANCE REGARDING PATENT AND COPYRIGHT INFRINGEMENT	APR 1984
52.227-14	RIGHTS IN DATA - GENERAL	JUN 1987
52.229-03	FEDERAL, STATE, AND LOCAL TAXES	JAN 1991
52.230-02	COST ACCOUNTING STANDARDS	AUG 1992
52.230-03	DISCLOSURE AND CONSISTENCY OF COST ACCOUNTING PRACTICES	NOV 1993
52.230-05	ADMINISTRATION OF COST ACCOUNTING STANDARDS	FEB 1995
52.232-01	PAYMENTS	APR 1984
52.232-08	DISCOUNTS FOR PROMPT PAYMENT	APR 1989
52.232-09	LIMITATION ON WITHHOLDING OF PAYMENTS	APR 1984
52.232-11	EXTRAS	APR 1984
52.232-23	ASSIGNMENT OF CLAIMS	JAN 1986
52.233-03	PROTEST AFTER AWARD	OCT 1995
52.243-01	CHANGES - FIXED-PRICE	AUG 1987
52.243-07	NOTIFICATION OF CHANGES	APR 1984
52.242-13	BANKRUPTCY	APR 1991
52.244-01	SUBCONTRACTS (FIXED PRICE CONTRACTS)	FEB 1995
52.245-02	GOVERNMENT PROPERTY (FIXED PRICE CONTRACTS)	DEC 1989
52.249-02	TERMINATION FOR CONVENIENCE OF THE GOVERNMENT (FIXED-PRICE)	APR 1984
52.249-08	DEFAULT (FIXED-PRICE SUPPLY AND SERVICE)	APR 1984
52.253-01	COMPUTER GENERATED FORMS	JAN 1991

I.2 52.215-2 AUDIT AND RECORDS--NEGOTIATION. (OCT 1995)--AS MODIFIED BY THE LIBRARY OF CONGRESS

(a) As used in this clause, records includes books, documents, accounting procedures and practices, and other data, regardless of type and regardless of whether such items are in written form, in the form of computer data, or in any other form.

(b) Examination of costs. If this is a cost-reimbursement, incentive, time-and-materials, labor-hour, or price redeterminable contract, or any combination of these, the Contractor shall maintain and the Contracting Officer, or an authorized representative of the Contracting Officer, shall have the right to examine and audit all records and other evidence sufficient to reflect properly all costs claimed to have been incurred or anticipated to be incurred directly or indirectly in performance of this contract. This right of examination shall include inspection at all reasonable times of the Contractor's plants, or parts of them, engaged in performing the contract.

(c) Cost or pricing data. If the Contractor has been required to submit cost or pricing data in connection with any pricing action relating to this contract, the Contracting Officer, or an authorized representative of the Contracting Officer, in order to evaluate the accuracy, completeness, and currency of the cost or pricing data, shall have the right to examine and audit all of the Contractor's records, including computations and projections, related to--

(1) The proposal for the contract, subcontract, or modification;

(2) The discussions conducted on the proposal(s), including those related to negotiating;

(3) Pricing of the contract, subcontract, or modification; or

(4) Performance of the contract, subcontract or modification.

(d) The Librarian of Congress or a duly authorized representative of the Library of Congress and the Comptroller General.

(1) The Librarian of Congress or a duly authorized representative of the Library and the Comptroller General of the United States, or an authorized representative, shall have access to and the right to examine any of the Contractor's directly pertinent records involving transactions related to this contract or a subcontract hereunder.

(2) This paragraph may not be construed to require the Contractor or subcontractor to create or maintain any record that the Contractor or subcontractor does not maintain in the ordinary course of business or pursuant to a provision of law.

(e) Reports. If the Contractor is required to furnish cost, funding, or performance reports, the Contracting Officer or an authorized representative of the Contracting Officer shall have the right to examine and audit the supporting records and materials, for the purpose of evaluating

(1) the effectiveness of the Contractor's policies and procedures to produce data compatible with the objectives of these reports and

(2) the data reported.

(f) Availability. The Contractor shall make available at its office at all reasonable times the records, materials, and other evidence described in paragraphs (a), (b), (c), (d), and (e) of this clause, for examination, audit, or reproduction, until 3 years after final payment under this contract or for any shorter period specified in Subpart 4.7, Contractor Records Retention, of the Federal Acquisition Regulation (FAR), or for any longer period required by statute or by other clauses of this contract. In addition--

(1) If this contract is completely or partially terminated, the records relating to the work terminated shall be made available for 3 years after any resulting final termination settlement; and

(2) Records relating to appeals under the Disputes clause or to litigation or the settlement of claims arising under or relating to this contract shall be made available until such appeals, litigation, or claims are finally resolved.

(g) The Contractor shall insert a clause containing all the terms of this clause, including this paragraph (a), in all subcontracts under this contract that exceed the simplified acquisition threshold in FAR Part 13, and--

(1) That are cost-reimbursement, incentive, time-and-materials, labor-hour, or price-redeterminable type or any combination of these;

(2) For which cost or pricing data are required; or

(3) That require the subcontractor to furnish reports as discussed in paragraph (e) of this clause. The clause may be altered only as necessary to identify properly the contracting parties and the

Contracting Officer under the Government prime contract.

I.3 52.216-18 ORDERING. (OCT 1995)

(a) Any supplies and services to be furnished under this contract shall be ordered by issuance of delivery orders or task orders by the individuals or activities designated in the Schedule. Such orders may be issued from contract award through completion and acceptance of deliverables for the base and options years, if exercised.

(b) All delivery orders or task orders are subject to the terms and conditions of this contract. In the event of conflict between a delivery order or task order and this contract, the contract shall control.

(c) If mailed, a delivery order or task order is considered "issued" when the Government deposits the order in the mail. Orders may be issued orally, by facsimile, or by electronic commerce methods only if authorized in the Schedule.

I.4 52.216-19 ORDER LIMITATIONS. (OCT 1995)

(a) Minimum order. When the Government requires supplies or services covered by this contract in an amount of less than 75 percent of the total yearly estimated quantities for the base and each option year as exercised, the Government is not obligated to purchase, nor is the Contractor obligated to furnish, those supplies or services under the contract.

(b) Maximum order. The Contractor is not obligated to honor any order for a combination of items in excess of 50 percent of the total yearly estimated quantities for the base and each option year, as exercised.

(c) If this is a requirements contract (i.e., includes the Requirements clause at subsection 52.216-21 of the Federal Acquisition Regulation (FAR)), the Government is not required to order a part of any one requirement from the Contractor if that requirement exceeds the maximum-order limitations in paragraph (b) above.

I.5 52.216-22 INDEFINITE QUANTITY. (OCT 1995)

(a) This is an indefinite-quantity contract for the supplies or services specified, and effective for the period stated, in the Schedule. The quantities of supplies and services specified in the Schedule are estimates only and are not purchased by this contract.

(b) Delivery or performance shall be made only as authorized by orders issued in accordance with the Ordering clause. The Contractor shall furnish to the Government, when and if ordered, the supplies or services specified in the Schedule up to and including the quantity designated in the Schedule as the "maximum". The Government shall order at least the quantity of supplies or services designated in the Schedule as the "minimum".

(c) Except for any limitations on quantities in the Order Limitations clause or in the Schedule, there is no limit on the number of orders that may be issued. The Government may issue orders requiring delivery to multiple destinations or performance at multiple locations.

(d) Any order issued during the effective period of this contract and not completed within that

period shall be completed by the Contractor within the time specified in the order. The contract shall govern the Contractor's and Government's rights and obligations with respect to that order to the same extent as if the order were completed during the contract's effective period; provided, that the Contractor shall not be required to make any deliveries under this contract after the final task order issued in the last option year.

I.6 52.216-27 SINGLE OR MULTIPLE AWARDS (OCT 1995)

The Government may elect to award a single delivery order contract or task order contract or to award multiple delivery order contracts or task order contracts for the same or similar supplies or services to two or more sources under this solicitation.

I.7 52.217-6 OPTION FOR INCREASED QUANTITY (MAR 1989)

The Government may increase the quantity of supplies called for in the Schedule at the unit price specified. The Contracting Officer may exercise the option by written notice to the Contractor within 30 days written notification. Delivery of the added items shall continue at the same rate as the like items called for under the contract, unless the parties otherwise agree.

I.8 52.217-9 OPTION TO EXTEND THE TERM OF THE CONTRACT (MAR 1989)

(a) The Government may extend the term of this contract by written notice to the Contractor within 30 days before contract expires or when funds become available, whichever date is later; provided, that the Government shall give the Contractor a preliminary written notice of its intent to extend at least 60 days before the contract expires. The preliminary notice does not commit the Government to an extension.

(b) If the Governlment exercises this option, the extended contract shall be considered to include this option provision.

(c) The total duration of this contract, including the exercise of any options under this clause, shall not exceed 66 months.

I.9 52.233-1 DISPUTES (NOV 1995)--AS MODIFIED BY THE LIBRARY OF CONGRESS

(a) This contract is not subject to the Contract Disputes Act of 1978, as amended (41 U.S.C. 601-613).

(b) Except as provided in the Act, all disputes arising under or relating to this contract shall be resolved under this clause.

(c) "Claim," as used in this clause, means a written demand or written assertion by one of the contracting parties seeking, as a matter of right, the payment of money in a sum certain, the adjustment or interpretation of contract terms, or other relief arising under or relating to this contract. A claim arising under a contract, unlike a claim relating to that contract, is a claim that can be resolved under a contract clause that provides for the relief sought by the claimant. However, a written demand or written assertion

by the Contractor seeking the payment of money exceeding $100,000 is not a claim under the Act until certified as required by subparagraph (d)(2) below. A voucher, invoice, or other routine request for payment that is not in dispute when submitted is not a claim under this clause. The submission may be converted to a claim under this clause, if it is disputed either as to liability or amount or is not acted upon in a reasonable time, by complying with the submission and certification requirements of this clause.

(d)

(1) A claim by the Contractor shall be made in writing and unless otherwise stated in this contract submitted to the Contracting Officer for a written decision. A claim by the Government against the Contractor shall be subject to a written decision by the Contracting Officer.

(2)

(i) Contractors shall provide the certification specified in subparagraph (d)(2)(iii) of this clause when submitting any claim -

(A) Exceeding $100,000; or

(B) Regardless of the amount claimed, when using -

(1) Arbitration conducted pursuant to 5 U.S.C. 575-580;or

(2) Any other alternative means of dispute resolution (ADR) technique that the agency elects to handle in accordance with the Administrative Dispute Resolution Act (ADRA).

(ii) The certification requirement does not apply to issues in controversy that have not been submitted as all or part of a claim.

(iii) The certification shall state as follows: "I certify that the claim is made in good faith; that the supporting data are accurate and complete to the best of my knowledge and belief; that the amount requested accurately reflects the contract adjustment for which the Contractor believes the Government is liable; and that I am duly authorized to certify the claim on behalf of the Contractor.

(3) The certification may be executed by any person duly authorized to bind the Contractor with respect to the claim.

(e) For Contractor claims of $100,000 or less, the Contracting Officer must, if requested in writing by the Contractor, render a decision within 60 days of the request. For Contractor-certified claims over $100,000, the Contracting Officer must, within 60 days, decide the claim or notify the Contractor of the date by which the decision will be made.

(f) The Contracting Officer's decision shall be final unless the Contractor appeals to the Chief of the Contracts and Logistics Division who will serve as the Hearing Officer to review the decision.

(g) If the claim by the Contractor is submitted to the Contracting Officer or a claim by the Government is presented to the Contractor, the parties, by mutual consent, may agree to use ADR. If the Contractor refuses an offer for alternative dispute resolution, the Contractor shall inform the Contracting Officer, in writing, of the Contractor's specific reasons for rejecting the request. When using arbitration pursuant to 5 U.S.C. 575-580, or when using any other ADR technique that the agency elects to handle in accordance with the ADRA, any claim, regardless of amount, shall be accompanied by the certification described in subparagraph (d)(2)(iii) of this clause, and executed in accordance with subparagraph (d)(3) of this clause.

(h) The Government shall pay interest on the amount found due and unpaid from (1) the date the Contracting Officer receives the claim (certified, if required); or (2) the date that payment otherwise would be due, if that date is later, until the date of payment. With regard to claims having defective certifications, as defined in (FAR) 48 CFR 33.201, interest shall be paid from the date that the Contracting Officer initially receives the claim. Simple interest on claims shall be paid at the rate, fixed by the Secretary of the Treasury as provided in the Contract Disputes Act (see 41 U.S.C. 611), which is applicable to the period during which the Contracting Officer receives the claim and then at the rate applicable for each 6-month period as fixed by the Treasury Secretary during the pendency of the claim.

(i) The Contractor shall proceed diligently with performance of this contract, pending final resolution of any request for relief, claim, appeal, or action arising under the contract, and comply with any decision of the Contracting Officer.

I.10 FAR 52.222-3 CONVICT LABOR (APR 1984) - As Modified by the Library of Congress

The Contractor agrees not to employ any person undergoing sentence of imprisonment in performing this contract.

I.11 FAR 52.232-25 PROMPT PAYMENTS (NOV 1994)--As Modified by the Library of Congress

Notwithstanding any other payment clause in this contract, the Government will make invoice payments and contract financing payments under the terms and conditions specified in this clause. Payment shall be considered as being made on the day a check is dated or an electronic fund transfer is made. All days referred to in this clause are calendar days, unless otherwise specified.

(a) Invoice Payment.

(1) For purposes of this clause, "invoice payment" means a Government disbursement of monies to a Contractor under a contract or other authorization for supplies of services accepted by the Government. This includes payments for partial deliveries that have been accepted by the Government and final cost or fee payments where amounts owed have been settled between the Government and the Contractor.

(2) The due date for making invoice payment by the designated payment office shall be the later of the following two events:

(i) The 30th day after the designated billing office has received proper invoice from the Contractor.

(ii) The 30th day after Government acceptance of supplies delivered or services performed by the Contractor. On a final invoice where the payment amount is subject to contract settlement actions, acceptance shall be deemed to have occurred on the effective date of the contract settlement. However, if the designated billing office fails to annotate the invoice with the actual date of receipt, the invoice payment due date shall be deemed to be the 30th day after the date the Contractor's invoice is dated, provided a proper invoice is received and there is no disagreement over quantity, quality, or Contractor compliance with contract requirements.

(3) If the contract does not require submission of an invoice for payment (e.g., periodic lease

payments), the due date will be as specified in the contract.

(4) An invoice is the Contractor's bill or written request for payment under the contract for supplies delivered or services performed. An invoice shall be prepared and submitted to the designated billing office specified in the contract. A proper invoice must include the items listed in subdivisions (a) (4) (i) through (a) (4) (viii) of this clause. If the invoice does not comply with these requirements, than the Contractor will be notified of the defect within seven (7) days after the receipt of the invoice at the designated billing office.

(i) Name and address of the Contractor.

(ii) Invoice date.

(iii) Contract number or other authorization for supplies delivered or services performed (including order number and contract line item number, if possible).

(iv) Description, quantity, unit of measure, unit price, and extended price of supplies delivered or services performed.

(v) Shipping and payment terms (e.g., shipment number and date of shipment, prompt payment discount terms). Bill of lading number and weight of shipment will be shown for shipments on Government bills of lading.

(vi) Name and address of Contractor's official to whom payment is to be sent (must be the same as that in the contract or in a proper notice of assignment).

(vii) Name (where practicable), title, phone number, and mailing address of person to be notified in event of defective invoice.

(viii) Any other information or documentation required by other requirements of the contract (such as evidence of shipment).

(b) Contract Financing Payments.

(1) For purposes of this clause, contract financing payment means a Government disbursement of monies to a Contractor under a contract clause or other authorization prior to acceptance of supplies or services by the Government. Contract financing payments include advance payments; progress payments based on cost under the clause at 52.232-16, Progress Payments; progress payments based on a percentage or stage of completion (32.102(e)(1), other than those made under the clause at 52.232-5, Payments Under Fixed-Price Construction Contracts, or the clause at 52.232-10, Payments Under Fixed-Price Architect Engineer Contracts; and interim payments on cost type contracts.

(2) For contracts that provide for contract financing, requests for payment shall be submitted to the designated billing office as specified in this contract or as directed by the Contracting Officer. Contract financing payments shall be made on the 30th day after receipt of a proper contract financing request by the designated billing office. In the event that an audit or other review of a specific financing request is required to ensure compliance with the terms and conditions of the contract, the designated payment office is not compelled to make payment by this date.

(3) For advance payments, loans, or other arrangements that do not involve recurrent submissions of contract financing requests, payment shall be made in accordance with the corresponding contract terms or as directed by the Contracting Officer.

(4) Contract financing payments shall not be assessed an interest penalty for payment delays.

I.12 52.203-9 REQUIREMENT FOR CERTIFICATE OF PROCUREMENT INTEGRITY-MODIFICATION. (SEP 1995)

(a) Definitions. The definitions set forth in FAR 3.104-4 are hereby incorporated in this clause.

(b) The Contractor agrees that it will execute the certification set forth in paragraph (c) of this clause when requested by the Contracting Officer in connection with the execution of any modification of this contract.

(c) Certification. As required in paragraph (b) of this clause, the officer or employee responsible for the modification proposal shall execute the following certification. The certification in paragraph (c)(2) of this clause is not required for a modification which procures commercial items.

CERTIFICATE OF PROCUREMENT INTEGRITY-MODIFICATION (NOV 1990)

(1) I, _____ (Name of certifier) am the officer or employee responsible for the preparation of this modification proposal and hereby certify that, to the best of my knowledge and belief, with the exception of any information described in this certification, I have no information concerning a violation or possible violation of subsection 27(a), (b), (d), or (f) of the Office of Federal Procurement Policy Act, as amended* (41 U.S.C. 423), (hereinafter referred to as "the Act"), as implemented in the FAR, occurring during the conduct of this procurement _____ (contract and modification number).

(2) As required by subsection 27(e)(1)(B) of the Act, I further certify that to the best of my knowledge and belief, each officer, employee, agent, representative, and consultant of _____ (Name of Offeror) who has participated personally and substantially in the preparation or submission of this proposal has certified that he or she is familiar with, and will comply with, the requirements of subsection 27(a) of the Act, as implemented in the FAR, and will report immediately to me any information concerning a violation or possible violation of subsections 27(a), (b), (d), or (f) of the Act, as implemented in the FAR, pertaining to this procurement.

(3) Violations or possible violations: (Continue on plain bond paper if necessary and label Certificate of Procurement Integrity-Modification (Continuation Sheet), ENTER NONE IF NONE EXISTS)

_____

_____

_____

_____

(Signature of the officer or employee responsible for the modification proposal and date)

_____

(Typed name of the officer or employee responsible for the modification proposal)

* Subsections 27 (a), (b), and (d) are effective on December 1, 1990. Subsection 27(f) is effective on June 1, 1991.

THIS CERTIFICATION CONCERNS A MATTER WITHIN THE JURISDICTION OF AN AGENCY OF THE UNITED STATES AND THE MAKING OF A FALSE, FICTITIOUS, OR FRAUDULENT CERTIFICATION MAY RENDER THE MAKER SUBJECT TO PROSECUTION UNDER TITLE 18, UNITED STATES CODE, SECTION 1001.

(End of certification)

(d) In making the certification in paragraph (2) of the certificate, the officer or employee of the competing Contractor responsible for the offer or bid, may rely upon a one-time certification from each individual required to submit a certification to the competing Contractor, supplemented by periodic training. These certifications shall be obtained at the earliest possible date after an individual required to certify begins employment or association with the contractor. If a contractor decides to rely on a certification executed prior to the suspension of section 27 (i.e., prior to December 1, 1989), the Contractor shall ensure that an individual who has so certified is notified that section 27 has been reinstated. These certifications shall be maintained by the Contractor for a period of 6 years from the date a certifying employee's employment with the company ends or, for an

agency, representative, or consultant, 6 years from the date such individual ceases to act on behalf of the contractor.

(e) The certification required by paragraph (c) of this clause is a material representation of fact upon which reliance will be placed in executing this modification.

Next.....Previous.....Return to the Table of Contents

ATTACHMENT 1

BACKGROUND INFORMATION OF INVESTIGATION OF SCANNING DEVICES

The information below has been gathered by the Library as a result three years of experience with a book edge device and recent investigation of alternate scanning devices.

1.1

Book Edge Device

A book-edge device capable of scanning both left- and right-hand pages for bound materials that are allowed to be turned up-side down and opened no more than 130ø is required for most bound materials.

In the past the Library has used a Xerox K5200 Series book-edge scanner. The company recently discontinued the manufacture of these devices. The Library now seeks proposals from offerors who have a comparable device from another manufacturer or may customize an existing device to meet the Library's requirements. Right-side up devices as described in the next section may be substituted for a book-edge device, provided they meets all requirements set within this contract.

The Xerox K5200 scanner software had a sophisticated "diffused" dithering alogirthm used to treat the moire patterns of printed halftones. The Library has found this algorithm to be far more superior than any other dithering algorithms.

1.2

Right-side up Device

Some of the bound materials to be digitized are not permitted to be turned up-side down, but may have covers that can be opened right-side up to 180ø. Devices that allow bound volumes to be placed in an upright position and are able to produce images according to requirements in Section C.6 may be used on these materials.

Because of the limited availability of such devices, the Library seeks proposals from offerors to suggest creative solutions to fulfill this need. One example of device that has the potential to fill this need is Minolta's DPCS 3000. However, this product will require some customization in order to meet the image requirements of this procurement. From demonstrations of this product, the Library has determined that the device lacks a dithering algorithm and the capability to produce grayscale images and JPEG compressed files as output.

1.3

Cradle Device

Some of the bound materials to be digitized are not permitted to be turned up-side down and may not be opened more then a certain number of degrees. Devices that allow bound volumes to be place in an upright position, hold materials in a cradle and are able to produce images according to requirements in Section C.6 may be used on these materials. Because of the limited availability of such devices, their high cost, and the potentially low volume of materials to be scanned with such a device, the Library seeks proposals from offerors to suggest creative solutions to fulfill this need.

1.4

Oversize Materials

Depending on the capture equipment chosen for bound materials, it may be difficult to accomodate materials larger than 8«x14 inches. The Library, therefore, will accept proposals from vendors to scan materials larger than 8«x14, but not greater than 11x17 in Lot 2.

Next.....Previous.....Return to Section J Table of Contents...Return to the Table of Contents

ATTACHMENT 2

ABOUT RESEARCH USE OF LIBRARY OF CONGRESS IMAGE COLLECTIONS

2.1

Display-screen Viewing and Printed Output

The students and researchers who use Library of Congress collections online desire the ability to view the images on their computer display screens and to print copies, typically on a laser printer. Most students and researchers use current-generation color-capable display systems with resolutions of 1024 x 768 or 1280 x 1024 pixels; their printers are likely to be capable of printing at settings of 300 or 600 dpi.

For the foreseeable future, access to Library of Congress collections will be provided using software associated with the World Wide Web protocols for Internet.

Informal experiments by the Library of Congress suggest that the image type that works best for display may not be the type that works best for printing. Display systems often produce the greatest legibility (and thus the best results) with a grayscale image. But printers often do best with a bitonal image. When a grayscale image is printed it must be "halftoned" and this tends to break up small features like fine print.

Generally speaking, students and researchers using Library of Congress text-based (as opposed to pictorial) collections place greater importance on the printed output than on screen display. They do not always view a document page as an end in itself, but typically will use the information that they find in the documents when they write their own articles or reports. Although some researchers may "carry away the document" on a floppy disk, most will prefer to print it and carry away a sheet of paper for later reference.

In past paper-scanning projects, the preference for printed output over screen display has led the Library to favor bitonal images. More recent explorations, however, have shown that a laser printer's representation of a grayscale image can be very good. In one informal experiment, for example, some manuscript pages were scanned from the original paper at 150 and 300 dpi. Using graphic-arts software, the laser printer was set for 600 dpi output (which affected the way in which the halftoning occurred) and the resulting paper copy was very legible.

The Library wishes to create images that will display and print successfully for researchers working in contexts like those described above, with the greatest emphasis placed on successful printing.

2.2

Scaling at Output Time, Capture Resolution for High-detail Content, and Capture of Large Pages in Segments

The researchers who access Library of Congress collections via Internet employ a variety of software packages, ranging from modest freeware associated with World Wide Web browsers to sophisticated graphic arts software for image handling. With varying degrees of effectiveness, this software scales (changes the sizes of) the images at display and print time. As noted above, the Library findings thus far suggest that, for documents (as distinct from pictorial matter), printed output is of greater importance to users than screen display. Typically, a researcher's personal computer will have a laser printer as a peripheral device; the Library's digital images must be conveniently printed within such a system.

The Library recognizes the emergent state of software associated with the World Wide Web and it well aware of the shortage of available tools for certain image types, especially viewing and printing software appropriate for bitonal images, especially bitonal images with TIFF headers and ITU group 4 compression. In fact, the Library is planning to make a special arrangement to offer viewing and printing software for this purpose to researchers who wish to use Library collections via the World Wide Web.

Although some researchers wishing to print document images may be limited to software like that described in the preceding paragraph, many others will have additional graphic arts or other software (not intended for use "within" the World Wide Web environment) capable of handling raster-scanned images.

A problem arises, however, in the case of fine print, especially when large page dimensions and fine print co-occur. In these cases, the contractor shall create segmented images of the large pages so that each segment, when scaled and printed in the manner described above, shall remain legible. These images may be created by scanning parts of the document separately or by capturing one large image and dividing it into segments in post-processing. Each segment shall be captured with an overlap that repeates on the joining images. In the latter case, the deliverables to the Library shall be the large image and all of the segments.

Next.....Previous.....Return to Section J Table of Contents...Return to the Table of Contents

ATTACHMENT 3

SAMPLE MATERIALS

ILLUSTRATION OF BOUND MATERIAL SIZES	**J-7**
ILLUSTRATION OF BOUND MATERIAL HANDLING	**J-8**
EXAMPLE TEXT PAGE **(Typically found in bound materials)**	**J-9**
EXAMPLE TEXT PAGE **(Typically found in bound materials)**	**J-10**
EXAMPLE TEXT PAGE - INDEX PAGE **(Typically found in bound materials)**	**J-11**
EXAMPLE LINE ART A **EXAMPLE LINE ART B** **(Typically found in bound materials)**	**J-12 & J-13**
EXAMPLE FINELY INSCRIBED ENGRAVING **(Typically found in bound materials)**	**J-14**
EXAMPLE PRINTED HALFTONE **(Typically found in bound materials)**	**J-15**
EXAMPLE TYPESCRIPT **(Typically found in unbound materials)**	**J-16**
EXAMPLE HANDWRITTEN MANUSCRIPT **(Unbound materials only, not to be converted and SGML-encoded)**	**J-17**
EXAMPLE FOLDED SHEETS **(Unbound materials only)**	**J-18**
SGML-ENCODED TEXT WITH PAGE IMAGES OF ORIGINAL 1 **EXAMPLE 1** **EXAMPLE 2**	**J-19 & J-20**
EXAMPLE IDENTIFYING TARGET **(Materials not to be converted and SGML-encoded)**	**J-21**
EXAMPLE IDENTIFYING TARGET	**J-22**
EXAMPLE SCANNING LOG **(Materials to be converted and SGML-encoded)**	**J-23**

Next... ..Previous.....Return to Section J Table of Contents.....Return to the Table of Contents

Bound Material—Sizes

S 1

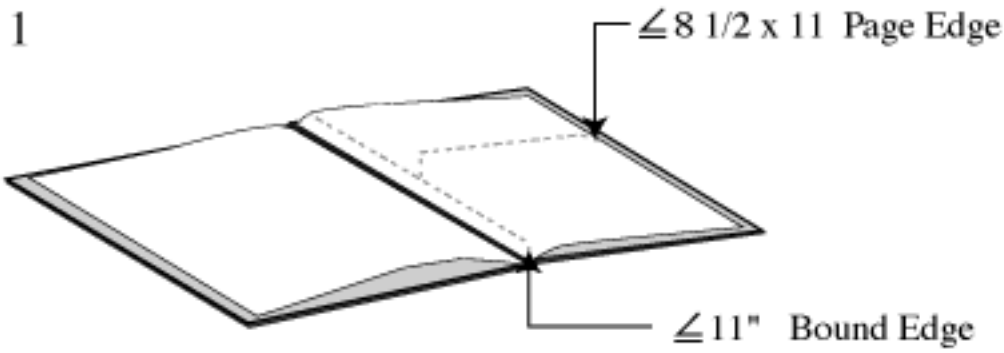

S 2

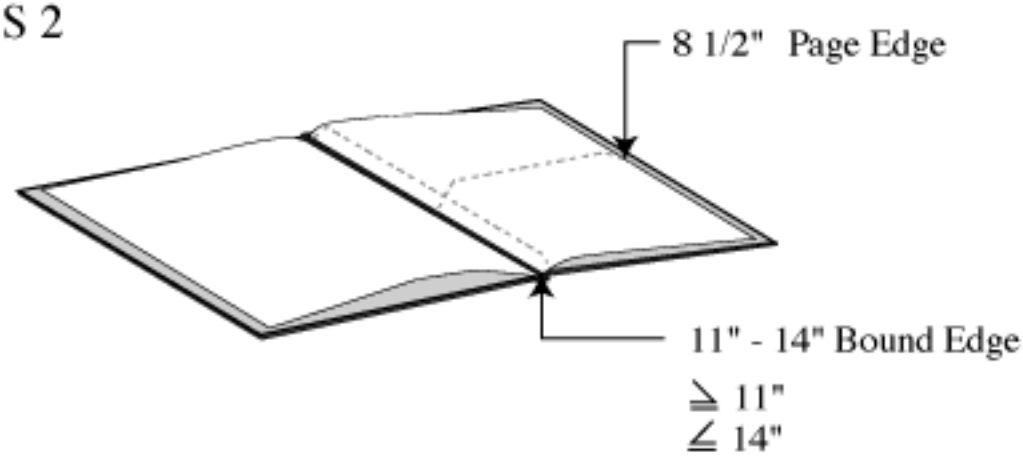

S 3

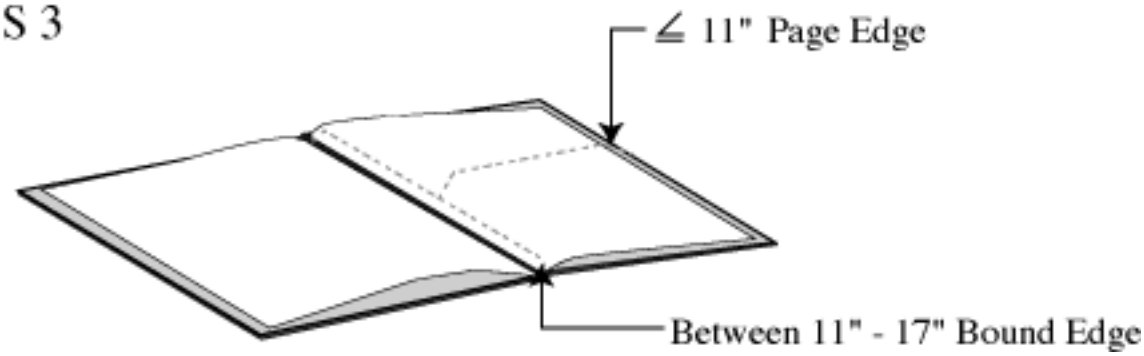

Next.. ...Return to Attachmnent 3 Table of Contents.. ...Return to Table of Contents

Bound Material — Handling

H 1

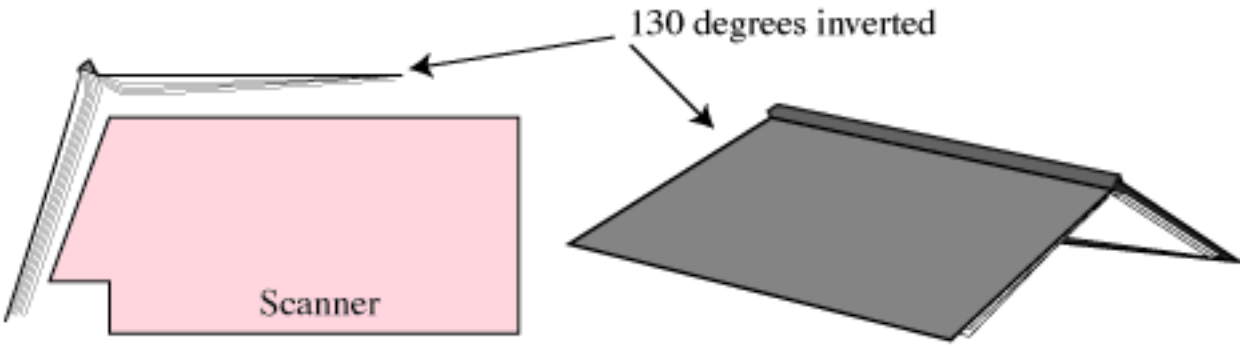

H 2

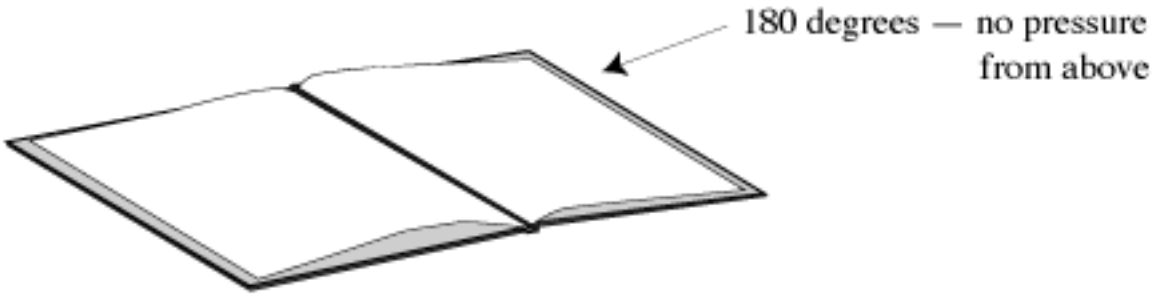

H 3

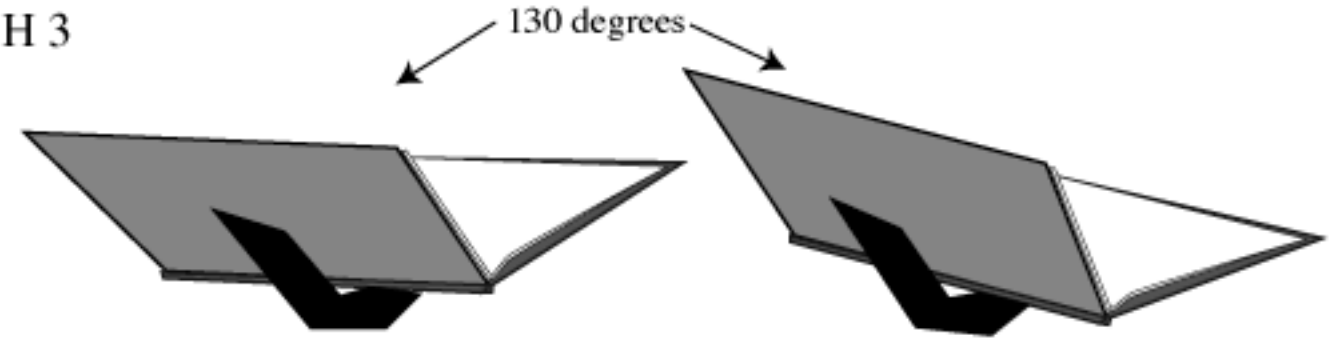

H 4

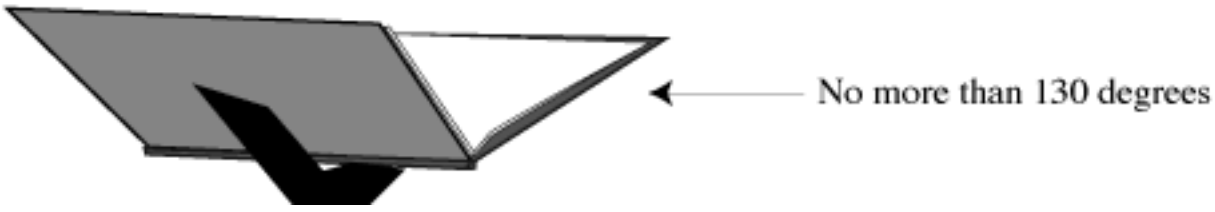

Next.. ...Previous.. ...Return to Attachmnent 3 Table of Contents.. ...Return to Table of Contents

CHAPTER XV

GREAT EARTHQUAKE AND FIRE OF 1906

Destruction Wrought in San Francisco and Neighboring Places—The Battle to Save the Mint Building—How San Francisco's Financial System Was Re-established—Nation-Wide Generosity Shown to Victims.

PERHAPS I should class my experience in the great fire and earthquake of April, 1906, as the most exciting feature of my administration as Superintendent of the mint in San Francisco. While I would not seek another such experience, I have often said that I was glad the opportunity fell to me to be present and in the midst of one of the great disasters of history, but I shall always censure myself that I did not make a record of what I saw, as well as the observations of other people and my own thoughts while the circumstances and details of the awful affair were fresh in my mind. I was suddenly awakened soon after 5 o'clock on that memorable morning of April 18, with the hundreds of thousands of others who lived within a radius of a hundred miles of this section, to a realization of being shaken by an earthquake that seemed to threaten to tear our house to pieces. The building danced a lively jig, jumping up and down a good part of a foot at every jump, at the same time swaying this way and that; the walls and ceilings were twisting and squirming, as if wrestling to tear themselves asunder or one to throw the other down. Then there were the terrifying noises, the cracking and creaking of timber, the smashing and crashing of falling glass, bric-a-brac, and furniture, and the thumping of falling bricks coursing down the roof sides from the chimney tops. Now and

Next.. ...Previous.. ...Return to Attachmnent 3 Table of Contents.. ...Return to

Table of Contents

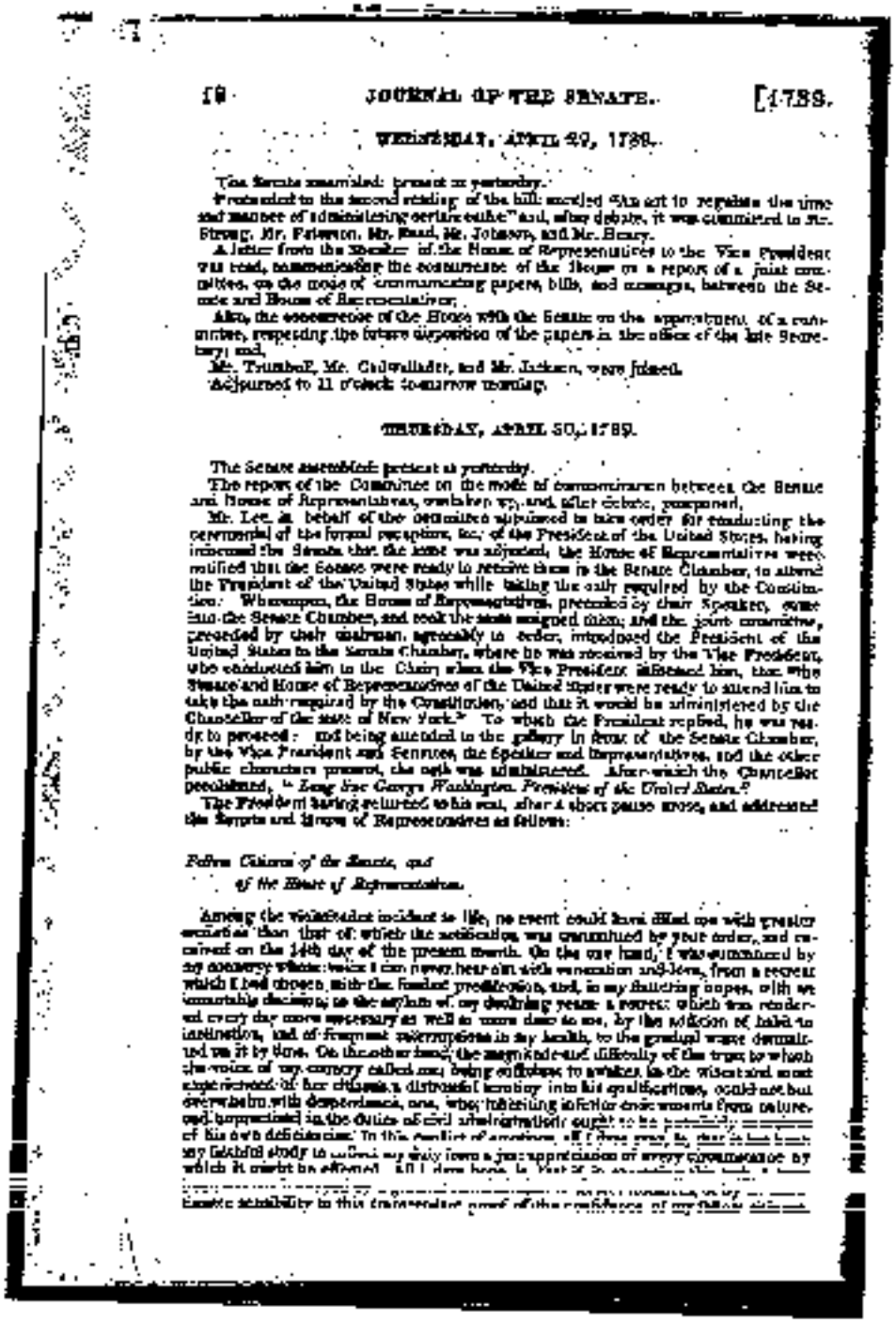

18 JOURNAL OF THE SENATE. [1789.

WEDNESDAY, APRIL 29, 1789.

The Senate assembled: present as yesterday.

Precedent to the second reading of the bill entitled "An act to regulate the time and manner of administering certain oaths" and, after debate, it was committed to Mr. Strong, Mr. Paterson, Mr. Read, Mr. Johnson, and Mr. Henry.

A letter from the Speaker of the House of Representatives to the Vice President was read, communicating the concurrence of the House in a report of a joint committee, on the mode of communicating papers, bills, and messages, between the Senate and House of Representatives;

Also, the concurrence of the House with the Senate on the appointment of a committee, respecting the future disposition of the papers in the office of the late Secretary; and,

Mr. Trumbull, Mr. Caldwallader, and Mr. Jackson, were joined.

Adjourned to 11 o'clock to-morrow morning.

THURSDAY, APRIL 30, 1789.

The Senate assembled: present as yesterday.

The report of the Committee on the mode of communication between the Senate and House of Representatives, was taken up, and, after debate, postponed.

Mr. Lee, in behalf of the committee appointed to take order for conducting the ceremonial of the formal reception, &c., of the President of the United States, having informed the Senate that the letter was adjusted, the House of Representatives were notified that the Senate were ready to receive them in the Senate Chamber, to attend the President of the United States while taking the oath required by the Constitution. Whereupon, the House of Representatives, preceded by their Speaker, came into the Senate Chamber, and took the seats assigned them; and the joint committee, preceded by their chairman, agreeably to order, introduced the President of the United States to the Senate Chamber, where he was received by the Vice President, who conducted him to the Chair when the Vice President addressed him, that the Senate and House of Representatives of the United States were ready to attend him to take the oath required by the Constitution, and that it would be administered by the Chancellor of the state of New York. To which the President replied, he was ready to proceed: and being attended in the gallery in front of the Senate Chamber, by the Vice President and Senators, the Speaker and Representatives, and the other public characters present, the oath was administered. After which the Chancellor proclaimed, "Long live George Washington, President of the United States."

The President having returned to his seat, after a short pause arose, and addressed the Senate and House of Representatives as follows:

Fellow Citizens of the Senate, and
of the House of Representatives.

Among the vicissitudes incident to life, no event could have filled me with greater anxieties than that of which the notification was communicated by your order, and received on the 14th day of the present month. On the one hand, I was summoned by my country, whose voice I can never hear but with veneration and love, from a retreat which I had chosen with the fondest predilection, and, in my flattering hopes, with an immutable decision, as the asylum of my declining years: a retreat which was rendered every day more necessary as well as more dear to me, by the addition of habit to inclination, and of frequent interruptions in my health, to the gradual waste committed on it by time. On the other hand, the magnitude and difficulty of the trust to which the voice of my country called me, being sufficient to awaken in the wisest and most experienced of her citizens a distrustful scrutiny into his qualifications, could not but overwhelm me with despondence, one, who inheriting inferior endowments from nature, and unpractised in the duties of civil administration, ought to be peculiarly conscious of his own deficiencies. In this conflict of emotions, all I dare say, is that it has been my faithful study to collect my duty from a just appreciation of every circumstance by which it might be affected. All I dare hope, is that if, in accepting this task, I have been too much swayed by a grateful remembrance of former instances, or by an affectionate solicitude for this favorite object of my native country, in the trust to which the voice of my fellow citizens has called me, I may, in these honorable testimonies of regard, find an apology for myself, with those who have so distinguished me.

Next.. ...Previous.. ...Return to Attachmnent 3 Table of Contents.. ...Return to

Table of Contents

RFP96-18 - ATTACHMENT 3

C. *First Session.*

Carroll, Mr. (Maryland,) duties on imports, 174, 339, 341.
on Department of Foreign Affairs, 599, 600.
the collection of duties, 644.
compensation of members, 702, 705.
amendments to the constitution, 757, 799.
seat of Government, 904, 911, 914, 945.

Second Session.

public credit, 1446, 1459, 1460, 1465, 1500.
next meeting of Congress, 1682.
Amelung's glass manufactory, 1686.
fixing the seat of Government, 1692, 1720.
laying a duty on spirits, 1699.

Third Session.

filling a vacancy in the Presidency, 1903, 1904, 1912, 1916.

First Session.

Clymer, Mr. (Pennsylvania,) duties on imports, 121, 138, 152, 174, 175, 258, 377.
duties on tonnage, 262.
titles, 336.
Smith's contested election, 342.
Executive Departments, 397.
Western lands, 430.
Department of Foreign Affairs, 508.
Indian treaties, 728.
amendment to the constitution, 737, 763.
New Jersey elections, 785.
the permanent seat of Government, 884, 899, 900, 908, 910, 931.

Second Session.

on the order of business, 1086.
the answer to the President's speech, 1089.
unfinished business, 1112.
rule of naturalization, 1159, 1162.
slave trade, 1223.
public credit, 1352, 1363.

Third Session.

the militia, 1875.
public lands, 1880.
duty on spirits, 1909.

F. *First Session.*

Fitzsimons, Mr. (Pennsylvania,) on duties on imports, 110, 120, 126, 131, 132, 136, 140, 144, 145, 147, 148, 150, 152, 154, 155, 156, 162, 164, 173, 175, 176, 180, 181, 182, 203, 207, 209, 214, 215, 216, 217, 226, 240, 244, 312, 320, 329, 349, 358, 379, 286, 294, 653.
bill for collection of duties, 610, 611
[illegible] Treasury, 620.
disposing of the Western lands, 654.
compensation to the President, &c., 657, 668.
appointing a committee of Ways and Means, 696, 697.
compensation of members, 704.
Indian treaties, 724, 728, 792.
[illegible] the permanent seat of government, 818, 880, 891, 909, 910, 931, 932, 936.

Second Session.

Fitzsimons, Mr., on the report of the Postmaster General, 1114.
remission of fines, 1167.
public credit, 1177, 1179, 1184, 1187, 1198, 1202, 1345, 1347, 1350, 1352, 1368, 1389, 1425, 1438, 1448, 1463, 1471, 1487, 1488, 1597, 1645, 1676.
slave trade, 1224, 1225, 1232.
the appropriation bill, 1499.
Robert Morris's accounts, 1515.
punishment of crimes, 1573.
Indian tribes, 1575.
tonnage on foreign shipping, 1620, 1625, 1626, 1631.
next meeting of Congress, 1678, 1681.
accounts between the United States and individual States, 1683.
duties on distilled spirits, 1694, 1698, 1700.
officers of the navy, 1708.

Third Session.

the militia, 1852, 1856, 1860, 1861, 1864, 1866.
public lands, 1879, 1885, 1887, 1910.
duties on spirits, 1892, 1900, 1909, 1919.
a supplementary bill to the act establishing the Bank of the United States, 2020.

Second Session.

Foster, Mr. (New Hampshire,) on public credit, 1412.
accounts between United States and individual States, 1700.

G. *First session.*

Gale, Mr. (Maryland,) on duties on imports, 151.
the seat of Government, 929, 931, 932.

Gerry, Mr. (Massachusetts,) duties on imports, 217, 219, 239, 327, 345, 355, 364, 369, 370, 609.
application of Virginia to amend constitution, 261.
on the manner of taking certain oaths, 277.
Executive Departments, 395.
Treasury Department, 399, 400, 406, 409, 411, 624, 626.
Western lands, 431.
amendments to the constitution, 462, 466, 687, 690, 732, 738, 743, 745, 750, 754, 756, 757, 758, 759, 760, 764, 768, 771, 776, 778, 780, 781, 783, 786, 797, 798, 805, 807.
Department of Foreign Affairs, 490, 521, 596, 599, 606.
the tonnage bill, 643.
[illegible] the collection bill and [illegible] Treasury, 644.
appointing a Committee of Ways and Means, 696.
[illegible] Treasury, 696.
compensation of members, 706, 709, 715, 925.
Indian treaties, 721.
adjournment, 811.
judiciary, 812, 851, 859, 864, 925.
the manner of reporting the debates, 353, 954.
the seat of Government, 957.
[illegible] on the Secretary of the Treasury's report on public credit, 1001, 1009, 1010, 1011.

Next.. ...Previous.. ...Return to Attachmnent 3 Table of Contents.. ...Return to Table of Contents

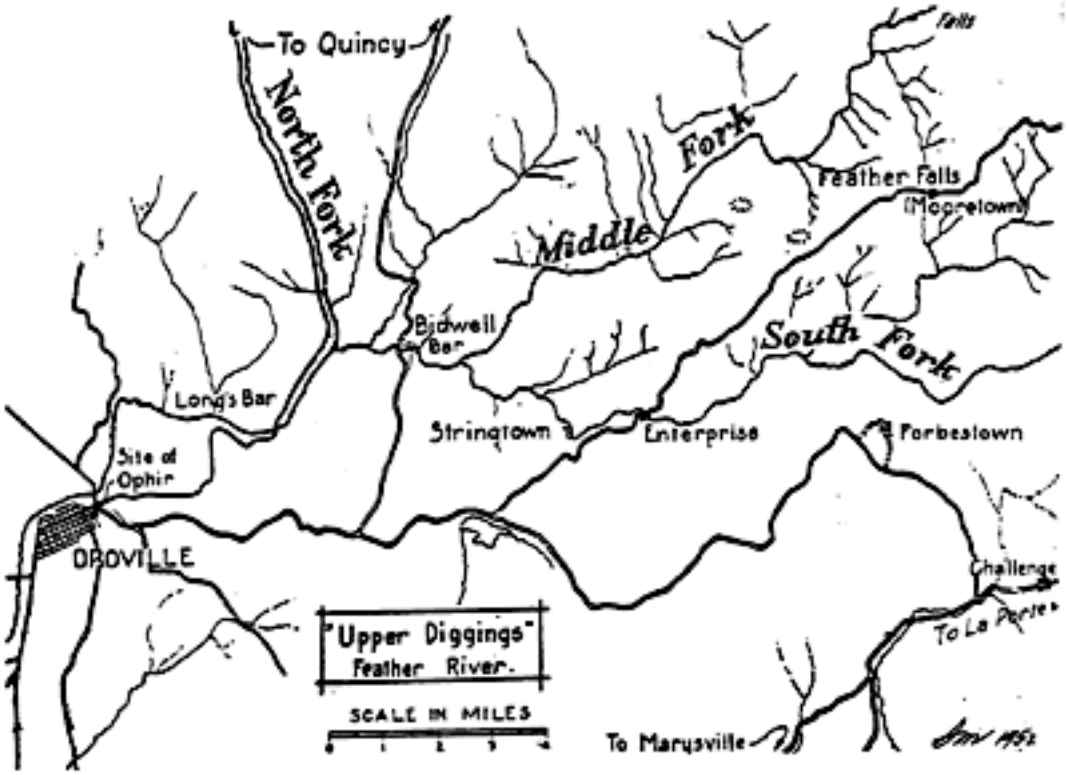

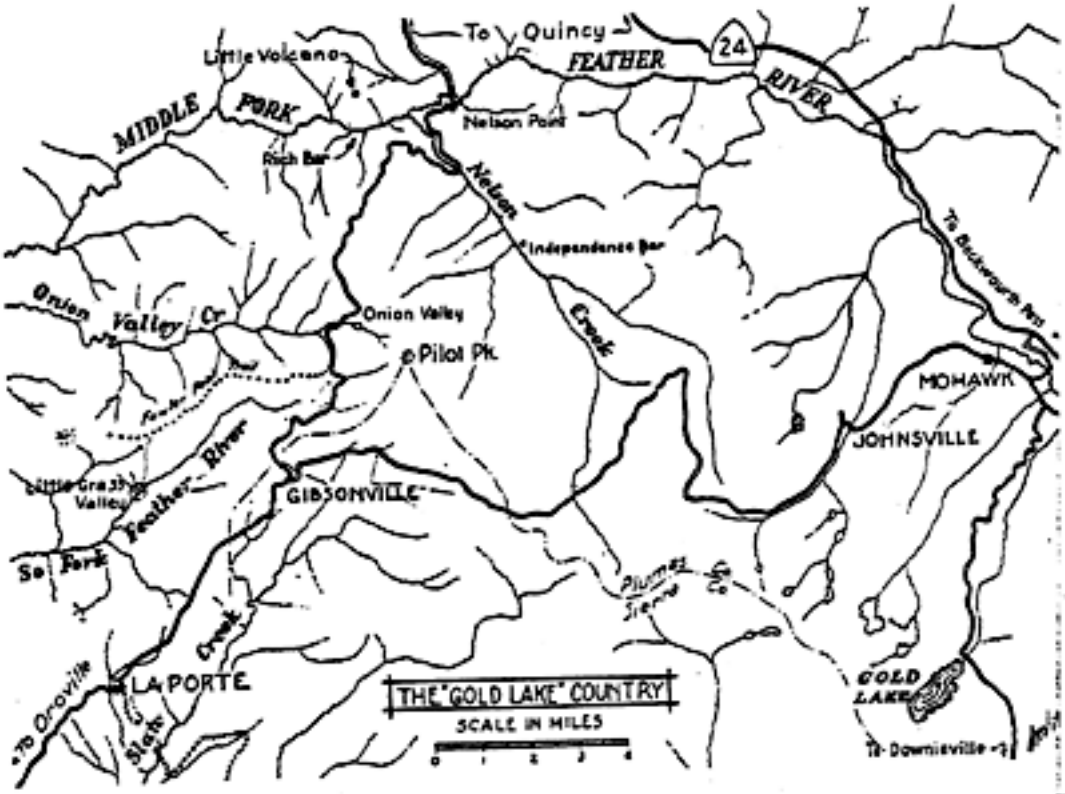

Next.. ...Previous.. ...Return to Attachmnent 3 Table of Contents.. ...Return to

Table of Contents

MRS. MARY CHURCH TERRELL
President of the National Association of Colored Women.

Next.. ...Previous.. ...Return to Attachmnent 3 Table of Contents.. ...Return to

Table of Contents

GOLDEN GATE, FROM CONTRA COSTA HILLS

Next.. ...Previous.. ...Return to Attachmnent 3 Table of Contents.. ...Return to Table of Contents

WILLIAM H. PERRY, ESQ., LOS ANGELES, 1882

MAMIE B. PERRY, LOS ANGELES, CAL.

Next.. ...Previous.. ...Return to Attachmnent 3 Table of Contents.. ...Return to

Table of Contents

July 30,1959 Cases of imported mumbu divination July 29,1858 p.5. 1831

then I came back he said:

Tah. Now em i no arse belong talk. Papa belong em i get sapmah now em i like try em, Papa belong em i kill em all along place. Em now i like school along em, now em i go along one fella meri belong Kampen.

? what

Tah. Wife of father's brother (classif) Tauttagan. Em, papa belong em i give em bow em i talk, suppose/pickon. belong me i big fella, you can like em. Now fire below papa i shoot em.

mumbu no pull em straight.

All i ask em trouble along meri; mumbu no make em noise. you like kis em poison. mumbu i no make em noise.

Now all i stop, make em kaiaki along em. lamail i no get talk.

? Do Kovi-Kong. suppose/ em marry Karambit woman following the lamail.

Tah. all is stop kis em. all i talk lamail i gammam, all lamail i talk,

" me fella shoot em talk along all man, bymby all i fraid."

? what became of the sister of Kovi?

Tah. all i make em plenty talktalk, this fella meri i get trouble, what for you ka. em. Now some fella i talk, i no get trouble, other fella i talk, kamia got trouble, other fella i talk, no get. Now em i lare. all i talktalk too much now em i sel em sister belong Kovi back i go. Two fella meri come up along one fella night.

? did they know of the other?

No two fella like em em. Now kamia i go up past time. Now sister belong Kovi i hear em now em i talk, what for, no like em this fella man past time?" em i go up now.

? when two maries go up at once like that would he sleep with either?

No, sit down wait em morning time, hear em talk belong all brothers past time.

? how long did she stay.

5 fella day. All man belong Karambit all i knock talktalk nobout along one fella now one fella i get trouble.

?. What do you mean by meri i get trouble.

vai(l) yagai taga tagvai(l) suppose/papa belong meri i make em something no good

before, suppose sel em talk along another fella place, kill em man, make

em poison, now i fast along tumbuna belong em.

? can trouble fast to a male descendant.

Yes. suppose man all time get em sick, all i talk, I think tumbuna belong em i get trouble.

Next.. ...Previous.. ...Return to Attachmnent 3 Table of Contents.. ...Return to

Table of Contents

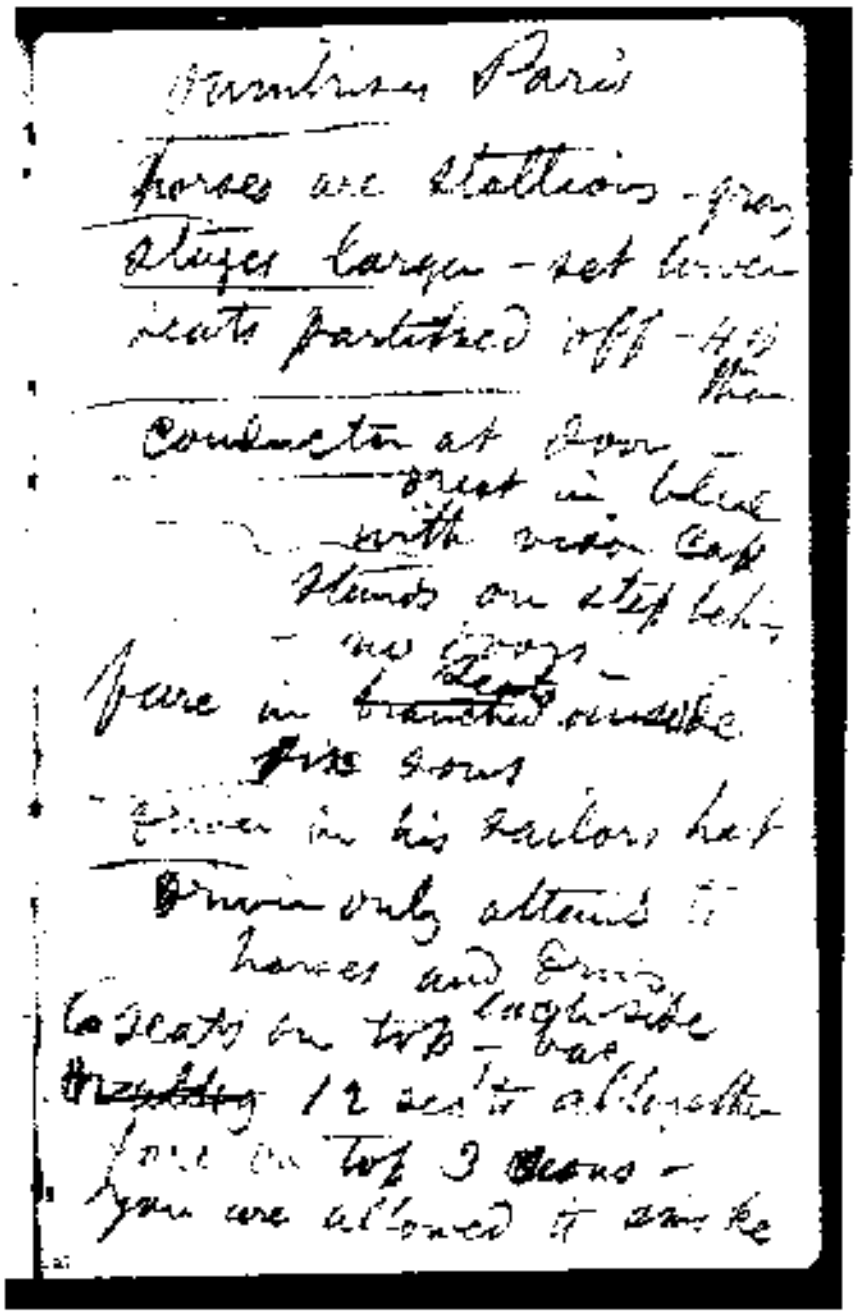

Omnibus Paris

horses are stallions - gray
stages larger - set lower
seats partitioned off - 4 [illegible]
Conductor at door -
- dress in blue
with vision cap
stands on step behind
- no doors
fare in ~~branched~~ seats inside
six sous
driver in his sailors hat
Driver only attends to
horses and drives
6 seats on top - back side
~~[illegible]~~ 12 seats altogether
fare on top 3 sous -
you are allowed to smoke

Next.. ...Previous.. ...Return to Attachmnent 3 Table of Contents.. ...Return to Table of Contents

Unbound Folded Sheets

☐ Indicates image numbering sequence (sequential page order)

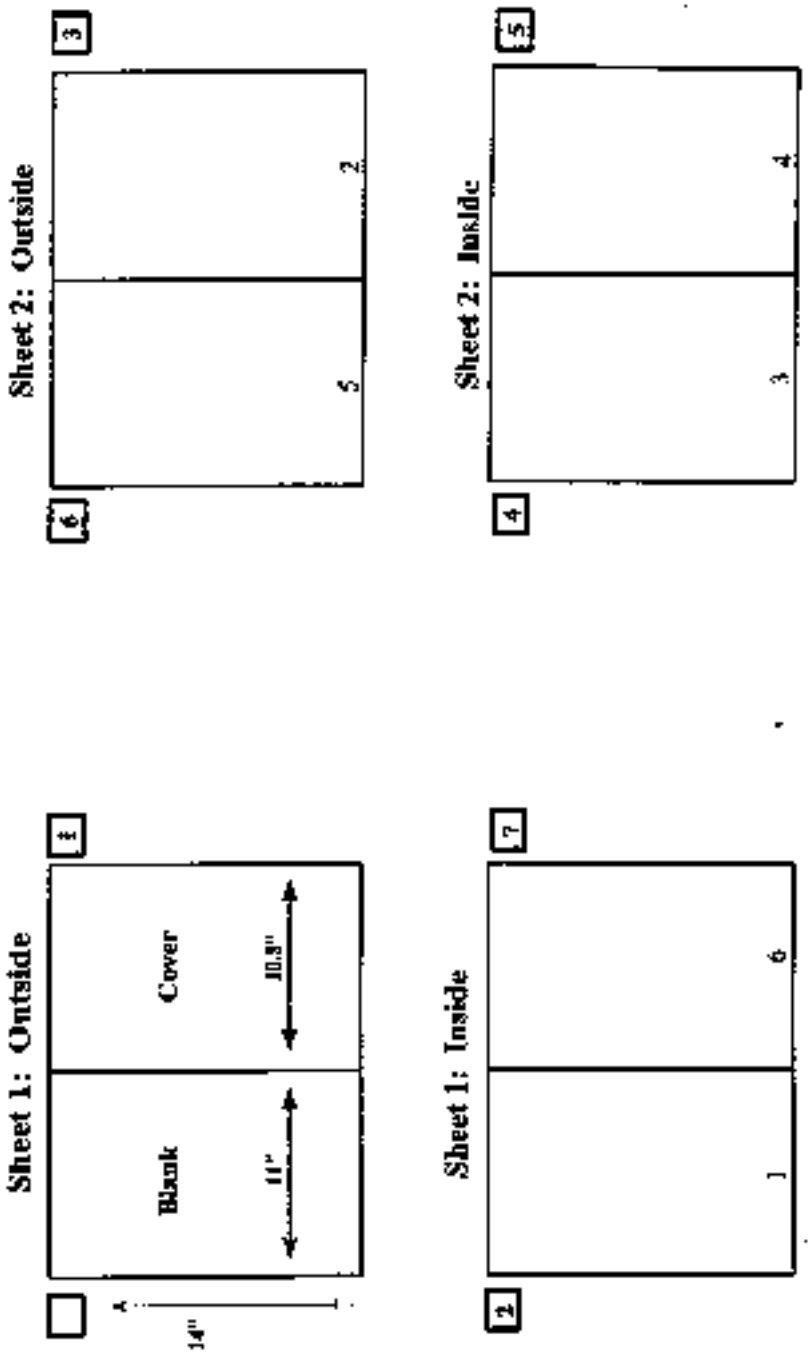

Next.. ...Previous.. ...Return to Attachmnent 3 Table of Contents.. ...Return to

Table of Contents

<pageinfo><controlpgno entity="0039">0039</controlpgno>
<printpgno>42</printpgno></pageinfo>
<head>What Papers Live By</head><illus entity="0039">
<caption> The First Editor of the<lb>Woman's Journal<lb>Mary A. Livermore
</caption><illus> <hi rend="other">One</hi> of the well-known facts in the world of publishing newspapers and periodicals is that neither magazines, newspapers nor periodicals of any kind live by the subscription price. Most of them live chiefly by advertisements.
Why, then, does the Journal not carry more advertising? The answer is that it will not take most of the advertisements it can get, and it cannot get most of the advertisements it wants. In the first place, The Woman's Journal will not accept liquor or tobacco advertisements, or any advertisements of patent medicines, swindling schemes, or matters of a questionable character. Every year it declines a considerable amount of business on this score.
“But,” the reader is sure to say, “what about the thousand and one advertisements which are legitimate? There are hundreds and thousands of advertisements of women's products for which the Journal ought to be an excellent medium ” In answer to this one might almost say that the better the grade of advertising the harder it is to get. The better grades of advertising require a much larger circulation than we have and a better grade of paper on which to print their advertisements; they naturally want their advertisements to be shown in the most attractive manner. And there are hundreds of publications just as good as ours which can give them the proper display. Another difficulty we have to combat is the fact that our paper is not well known to men; it is not advertised anywhere. it is not displayed anywhere; they rarely see any one reading it; they cannot get it on the newsstands, and, in short, they cannot imagine who reads it. This is hard to combat. Another reason given by those who refuse to advertise in the Woman's Journal is that the advertiser or the advertising

Next.. ...Previous.. ...Return to Attachmnent 3 Table of Contents.. ...Return to

Table of Contents

What Papers Live By

The First Editor of the Woman's Journal

Mary A. Livermore

ONE of the well-known facts in the world of publishing newspapers and periodicals is that neither magazines, newspapers nor periodicals of any kind live by the subscription price. Most of them live chiefly by advertisements.

Why, then, does the Journal not carry more advertising? The answer is that it will not take most of the advertisements it can get, and it cannot get most of the advertisements it wants. In the first place, The Woman's Journal will not accept liquor or tobacco advertisements, or any advertisements of patent medicines, swindling schemes, or matters of a questionable character. Every year it declines a considerable amount of business on this score.

"But," the reader is sure to say, "what about the thousand and one advertisements which are legitimate? There are hundreds and thousands of advertisements of women's products for which the Journal ought to be an excellent medium." In answer to this one might almost say that the better the grade of advertising the harder it is to get. The better grades of advertising require a much larger circulation than we have and a better grade of paper on which to print their advertisements; they naturally want their advertisements to be shown in the most attractive manner. And there are hundreds of publications just as good as ours which can give them the proper display.

Another difficulty we have to combat is the fact that our paper is not well known to men; it is not advertised anywhere, it is not displayed anywhere; they rarely see any one reading it; they cannot get it on the newsstands, and, in short, they cannot imagine who reads it. This is hard to combat.

Another reason given by those who refuse to advertise in the Woman's Journal is that the advertiser or the advertising

Next.. ...Previous.. ...Return to Attachmnent 3 Table of Contents.. ...Return to Table of Contents

RFP96-18 - ATTACHMENT 3

ITEM ID: 10902

TITLE: South Pacific Ethnographic Archives
New Guinea
Iatmul People
Margarat Mead and Gregory Bateson field trip, 1938

CONTAINER: 109

FOLDER: 2

COLLECTION: Margaret Mead Collection
South Pacific Ethnographic Archives
Manuscript Division

FILENAMING STRUCTURE: 1

DO NOT CONVERT

Next.. ...Previous.. ...Return to Attachmnent 3 Table of Contents.. ...Return to

Table of Contents

<!doctype tei2 public "-//Library of Congress - Historical Collections (American Memory)//DTD ammem.dtd//EN">
<tei2><teiheader type="txt" creator="American Memory, Library of Congress" status="new" date.created="7/27/96"><filedesc><titlestmt>
<title>amrlg-050287</title>
<title>Cost of living studies. No. 1, 1928: Quality and cost estimate of the standard of living of the professional class: a machine-readable transcription.</title>
<title>The Coolidge Era and the Consumer Economy, 1921-1929; American Memory, Library of Congress.</title>
<resp><role>Selected and converted.</role>
<name>American Memory, Library of Congress.</name></resp></titlestmt>
<publicationstmt> Washington. 1996.
Preceding transcription intended to be 99.995% accurate.
</publicationstmt>
<sourcedesc><lccn>unk81-50287</lccn>
<coll>General Collection, Library of Congress</coll>
<copyright>Copyright status not determined.</copyright></sourcedesc><filedesc>
</teiheader><text type="publication">

FILENAMING STRUCTURE: 2/2B

Next.. ...Previous.. ...Return to Attachmnent 3 Table of Contents.. ...Return to

Table of Contents

SAMPLE SCANNING LOG

Batch No._____
Scan Date:_____

Collection:_____
Scanning Operator:_____
Machine #:_____

Item ID	Control Page No.	Print Pg No.	Feature	Halftone Treatment (y/n)	Comment

Previous.. ...Return to Attachmnent 3 Table of Contents.. ...Return to Table of

Contents

ATTACHMENT 4

FILENAMES AND DELIVERY DIRECTORIES

As outlined in Section C.10, the contractor shall assign a digital-image filename to each image captured as part of the initial image-capture process, and deliver these files to the Library in a certain arrangement of directories and subdirectories, following the specifications outlined below.

4.1

Filename/Directory Structure 1: Unnumbered Documents in Folder Structure

Generally speaking, this structure applies to certain manuscript collections, e.g., the Booker T. Washington Papers. The documents in these collections have been placed in separate file folders within certain logical elements: series and subseries. Each folder, series, and subseries representing units that cohere intellectually. In addition, the folders are stored in containers (boxes), in sequence. The following table illustrates this form of organization:

Collection

Series 1

Subseries A

Folders 1, 2, 3, etc.

Documents 1, 2, 3, etc.

Subseries B

Folders 1, 2, 3, etc.

Documents 1, 2, 3, etc.

Series 2

Subseries A

Folders 1, 2, 3, etc.

Documents 1, 2, 3, etc.

Note:

> The folders are placed in containers (boxes), until each container is filled. Often, these containers are numbered. Thus, a researcher may identify materials within a collection logically, i.e., by series, subseries, and folder; or physically, by container number and folder name or number.

Each collection's organization, including a list of series, containers, and folders, is found in the collection's printed finding aid.

The Library's digital presentation of these collections will be organized in the logical structure, i.e., by series and folder. Researchers will access the collections by means of an online finding aid (based on the existing printed finding aid) to be produced by the Library. Although the containers do not represent logical units, their numbers may be employed in directory naming in order to retain the sequence of folders in the collection. The Library will provide the contractor with a copy of the printed finding aid (or an equivalent list) at the time of scanning. If containers and folders have not been previously numbered, the Library will assign numbers by marking the finding aid or list. The marked-up finding aid or list will indicate the identifier for each series and folder. For collections in this category, the contractor shall deliver the images in a combination of directories and subdirectories. The highest level delivery directories will represent collection series, with lower-level directories representing folders. The individual files will reproduce the document pages within the folders.

Within the folders, the images receive sequential numbers. Folders generally contain a few hundred pages. Since they never contain more than 10,000 leaves (and thus will not exceed 9,999 pages to be imaged) the Library requires the use of a four-digit number (including leading zeroes) for page-image naming. The contractor shall assign filenames sequentially within the folder, i.e., 0001, 0002, 0003, 0004, etcetera.

4.1.1

Filename/Directory Structure 1, Continued: Recognizing and Marking New Documents

The special contractor requirement associated with folder-based manuscript collections is the recognition of "new documents." (See also Section C.4.3.) Documents in folders tend to be letters, reports, and other written or printed items. In order to aid future researchers, each image that represents the start of a new document shall be marked by adding the letter d to the filename in the last position before the filename extension, e.g., 0001d.jpg.

Recognizing new documents means observing that the next image represents the start of a letter (which may be indicated by letterhead, date, salutation, etc.) or the first page of a report (which may be indicated by a title, author's name, page 1, etc.). Miscellaneous pieces of paper (for example, scribbled notes, 3x5

slips, or groups of small items, etc.) should also be treated as new documents. As noted above, the Library understands that these judgements are sometimes difficult and requires only 80 percent accuracy in the identification of new documents.

4.1.2

Filename/Directory Structure 1, Continued: Example of Unnumbered Document/File Folder Collection

The table that follows offers an example of a directory and filename structure for a folder-based manuscript collection.

Finding Aid information	Identifier for directory provided by LC	Name assigned to directory by contractor	Identifier for folder provided by LC	Name assigned to folder subdirectory by contractor	Image filenames assigned by contractor
Series: *Correspondence*	gpcor	gpcor001 (may be more directories if large series)	.	.	.
Container: 816 Folder (no. 23): "Letters, January-March 1876"	.	.	81623	81623	.
Image number 1, start of first document, feature recognized by contractor	.	.	.	.	0001d.jpg
Remaining pages of first document; image nos. 2-5	.	.	.	.	0002.jpg 0003.jpg 0004.jpg 0005.jpg
Image number 6, first page of new document, feature recognized by contractor	.	.	.	.	0006d.jpg
Remaining pages of second document; image numbers 7-10	.	.	.	.	0007.jpg 0008.jpg 0009.jpg 0010.jpg

4.2

Filename/Directory Structure 2: Bibliographic Record/Print-Page Number Structure

This structure will generally be used for monographs. The Library will supply a list or a simple database for the group of monographs to be scanned. The key elements on this list or database will be:

Collection name
Example: Western Travel in Rare Books

Collection identifier
Example: wtrb

Book author and/or title
Example: White, Michael Claringbud. California all the way back to 1828.

LCCN: the Library of Congress catalog card number (a unique number)
Example: ca4-14356 (stored in computer as 04014356)

Book identifier
Example: 014356

Text conversion yes/no
Example: No

Before scanning, the contract shall verify the identity of the monograph by comparing it to the identifying target presented by the Library. The target will provide the identifier to be used for the monograph. The target is to be scanned to permit the verification of the item during the Library's quality review process.

All of the images of book pages shall be delivered to the Library in a directory assigned the name of the book identifier, 014356 in the first example above.

The individual image filenames shall be assigned as outlined in the following two sections.

At the time that a task for a particular printed matter collection is assigned, the Library will provide written instructions, a copy of the finding aid or equivalent (in print and/or in machine-readable form).

Specific instructions about scanning blank pages (pages with no marks of any kind) will be developed for each collection. In general, the rule will be to omit blank pages from the image set and numbering

structure.

4.2.1

Filename/Directory Structure 2A -- Filenames for Book Page Images Where Printed Page Numbers are Tracked

This pattern is used when no SGML-encoded, machine-readable text is required.

Overall name pattern: **cccppppf**

NOTE: ccc means image control number, pppp means print page number, and f means feature.

ccc Image control number

The first three digits are used to assign a set of sequential numbers to all of the images for the book. The ccc for the image of the target is 000. The first actual image from the book is assigned control number 001.

pppp Printed page number

Digits four through seven carry the actual printed page number for the page reproduced. The page number is to be represented with leading zeros.

The contractor must determine this number by examining the page itself.

If the printed number is arabic, then it is simply keyed in, with leading zeros.

If the number is roman, the lead digit (first of this set of four; fourth digit in the overall filename) shall be r, and the remaining three digits in this set (digits five, six, and seven in the overall filename) will represent the arabic translation of the roman number.

If there is no printed page number, then 0000 shall be keyed.

f Feature

Digit eight indicates that the page or pages contain a special feature. The contractor must recognize the feature by examining the image itself. The abbreviations for the features to be indicated are as follows:

g Title Page (if the work has more than one title page, indicate the main title page if that

can be easily determined; if not, indicate the first)
n Table of Contents (if more than one page, indicate all pages)
l List of Illustrations (if more than one page, indicate all pages)
p Repeating page image
x Index (if more than one page, indicate all pages)

4.2.2

Filename/Directory Structure 2B -- Filenames for Book Page Images When Printed Page Numbers and Features are not Tracked

Generally speaking, this approach will be used when text conversion is planned. The converted texts will include SGML markup that will indicate the relationship between image control numbers and printed page numbers thus making it unnecessary to capture this information in the filenames.

Overall name pattern:**cccc**

cccc Image control number

The first three digits are used to assign a set of serial numbers to all of the images for the book. The cccc for the image of the target is 0000. The first actual page image from the book is assigned 0001.

4.3

Filename/Directory Structure 3: Serial Structure

This structure will be used for serials (e.g., magazines). The Library will supply a list or a simple database for the serials to be scanned. The key elements on this list or database will be:

Collection name
Example: Magazines for Children

Collection abbreviation
Example: mcgc

Serial title
Example: Wee Winkle

Monthly LCCN: the Library of Congress catalog card number (a unique number)
Example: 07-53986

ISSN: the International Standard Serial Number (a unique number)
Example: 45670923

Serial identifier
Example: 45670923

Issue enumeration
Example: January - December, 1918

Issue identifiers
Example: 191801, 191802, 191803, etc.

Cumulative index
Example: For 1918

Cumulative index identifier
Example: 1918in

Before scanning, the contract shall verify the identity of the serial by comparing it to the identifying target presented by the Library. The target will provide the identifier to be used for the serial. The target is to be scanned to permit the verification of the item during the Library's quality review process.

All of the subdirectories containing the images for each serial shall be delivered to the Library in a directory assigned the name of the serial identifier, 45670923 in the example above.

New subdirectories shall be created for each issue, e.g., 191801, 191802, 191803, for collation records, e.g., 1918cl, and cumulative indexes, e.g. 1918in.

At the time that a task for a particular serial collection is assigned, the Library will provide written instructions, a copy of the finding aid (in print and/or in machine-readable form).

4.3.1

Filename/Directory Structure 3A -- Filenames for Serial Page Images When Printed Page Numbers are Tracked

This pattern is used when no SGML-encoded, machine-readable text is required.

The individual image filenames for actual serial page shall be assigned as follows. Note that a separate requirement for the collation-record and cumulative index images is stated below.

Overall name pattern: **cccppppf**

ccc Image control number

The first three digits are used to assign a set of serial numbers to all of the images for the issue of the serial. The first actual image is assigned 001.

pppp Printed page number

Digits four through seven carry the actual printed page number for the page reproduced. The page number is to be represented with leading zeros. The contractor must determine this number by examining the image itself.

If the printed number is arabic, then it is simply keyed in, with leading zeros.

If the number is roman, the lead digit (first of this set of four; fourth digit in the overall filename) shall be r, and the remaining three digits in this set (digits five, six, and seven in the overall filename) will represent the arabic translation of the roman number.

If there is no printed page number, then 0000 shall be keyed.

f Feature

Digit eight indicates that the page or pages contains a special feature. The contractor must recognize the feature by examining the image itself. The abbreviations for the features to be indicated are as follows:

c Cover (if the work has more than one cover, indicate the main cover if that can be easily determined; if not, indicate the first)
n Table of Contents (if more than one page, indicate all pages)
l List of Illustrations, if any
p Repeating page image
x Index, if any

4.3.2

Filename/directory structure 3B -- Filenames for Serial Page Images When Printed Page Numbers are not Tracked

This pattern is used when SGML-encoded, machine-readable text is required.

The individual image filenames for actual serial page shall be assigned as follows.

Note that a separate requirement for the collation-record and cumulative index images is stated below.

Overall name pattern: **cccf**

ccc Image control number

The first three digits are used to assign a set of serial numbers to all of the images for the issue of the serial. The first actual image is assigned 001.

4.3.3

Filename/directory structure 3C -- Filenames for Collation Records and/or Cumulative Indexes for Serials

Overall name pattern: **cccpppp**

ccc Image control number

The first three digits are used to assign a set of serial numbers to all of the images in the index or collation. The first image is assigned 001.

pppp Printed page number

Digits four through seven carry the actual printed page number for the page reproduced. The page number is to be represented with leading zeros. The contractor must determine this number by examining the image itself.

If the printed number is arabic, then it is simply keyed in, with leading zeros.

If the number is roman, the lead digit (first of this set of four; fourth digit in the overall filename) shall be r, and the remaining three digits in this set (digits five, six, and seven in the overall filename) will represent and arabic translation of the roman number.

If there is no printed page number, then 0000 shall be keyed.

4.4

Filename/Directory Structure 4: Copyright Registration and Technical Document Number Structure

The copyright-registration-number/technical-document structure applies to two classes of material. First and foremost, it will be used for collections deposited at the Library in years past, as part of the copyright registration process and often left uncataloged. Some of these are printed matter, e.g., the nineteenth century sheet music collections, while others are manuscripts (including typescripts), e.g., the collection of unpublished early twentieth century plays. Second, it will be used for separate, short items like technical reports. These are typically offset-printed reports, many prepared for such agencies as the Department of Defense, running about 20-30 pages each.

Every document in the copyright collections received a registration number when the collections were copyrighted. The number is generally stamped on the cover or title page, often with a rubber stamp or written into a blank portion of a rubber stamp. In a few cases, the first part of the number is rendered in roman numeral and the latter part in arabic, e.g., the rubber stamp indicates registration number xxc 14, for registration number 8014. Technical reports also tend to have a unique number assigned by the agency that prepared them.

The contractor shall assign directory names based upon the registration or report number. Depending upon the collection, this number may reach five or more digits, e.g., 56872. The Library will provide a list of identifiers based on this number. One example is the Library's sheet music collection. For this collection, the identifier for the directory will consist of the copyright registration number, with added leading zeros sufficient to create a five-digit expression and prefixed with collection abbreviation, e.g., SM for the sheet music collection. Thus the directory for the sheet music items registered under the number 8692 shall be named sm08692.

At the time that a task for a particular collection is assigned, the Library will provide written instructions, a copy of the finding aid (in print and/or in machine-readable form).

The individual image filenames for actual page images shall be assigned as follows.

Copyright/tech report structure page-image name pattern: cccppppf

ccc Image control number

The first three digits are used to assign a set of serial numbers to all of the images for the item. The first actual image is assigned 001.

If the contractor encounters missing or unscannable film frames, the relevant control number shall be left unassigned to permit future capture and insertion of the image in the set. A note of this discovery shall also be made in the scanning log. If repeating film images are identified and scanned (contractor's option), the control number shall increment in the usual way and (as noted below) the repeat noted as a feature.

pppp Printed page number

Digits four through seven carry the actual printed page number for the page reproduced. The page number is to be represented with leading zeros. The contractor must determine this number by examining the image itself.

If the printed number is arabic, then it is simply keyed in, with leading zeros.

If the number is roman, the lead digit (first of this set of four; fourth digit in the overall filename) shall be r, and the remaining three digits in this set (digits five, six, and seven in the overall filename) will represent and arabic translation of the roman number. If there is no printed page number, then 0000 shall be keyed.

f Feature

c Cover (if the work has more than one cover, indicate the main cover if that can be easily determined; if not, indicate the first)
n Table of Contents (if more than one page, indicate all pages)
l List of Illustrations, if any
p Repeating page image
x Index, if any

4.5

Filenames for Multiple Versions of the Same Page

This filenaming structure is used when two images result from the capture of text page with a printed halftone and text in order to achieve legibility of both the text and image. The image which is maximized for the legibility of the text shall have the filename consistent with the structure of the rest of the document. The image which is maximized for the legibility of the image shall have the same name as the text image but carries a feature designation of p, which indicates a repeating page.

4.6

Filenames for Derivative Images

Derivative bitonal images of grayscale and color images shall retain the same name as the original. These images will be distguished by their extensions. (Grayscale and color images will have a .jpg extenstion, while the bitonal images will have a .tif extension.

4.7

Filenames for Images of Segments of Pages

The Library will offer sets of foldout and large page segments to end-users in a presentation that suggests a grid or matrix. The assembly of the grid or matrix of images will depend upon the system of filenames assigned to the images.

The Library foresees that segmented images will be encountered in (1) books for which the texts will be converted and (2) unnumbered documents in folders. The first four filename positions shall be the control page number of the image and shall be followed by a three-character feature identifier which will indicate the the position of that segment in a grid that represents the whole item.

Whole page image: **ccc**
Segment images **cccfxy**

ccc Image Control Number
f Feature identifier for segment images - s
x Horizontal grid coordinate - Alpha, beginning with a for the first row
y Vertical grid coordinate - Numeric, beginning with 1 for the first column

Here are two examples:

Example 1: The 154th page scanned is a large map that must be segmented into twelve parts.

Filename of whole image of item (if any): 154.tif

Filenames of segment images with feature designations for each segment of the twelve-segment map:

154sa1.tif	154sa2.tif	154sa3.tif
154sb1.tif	154sb2.tif	154sb3.tif
154sc1.tif	154sc2.tif	154sc3.tif
154sd1.tif	154sd2.tif	154sd3.tif

Example 2: The 79th page scanned in a manuscript folder is a drawing that must be scanned as two segments (top half and bottom half). No whole page image is scanned

Filenames of segment images with feature designations for each of the two segments:

079sa1.tif	079sb1.tif

4.8

Filenames for Images with Two Print Pages

This filenaming structure is used only when folded sheets smaller than 8 1/2 x11 capture two whole pages in one image. When print page numbers and features are **not** tracked, the filename would be **cccc** for a four (4) digit control page number. When print page numbers and features are tracked, the filename would be **cccppppf**, where ccc is the three (3) digit control page number, **pppp** is the print page number one the left page, and **f** is the most significant feature on either page.

4.9

Filenames for Resolution Targets

The filenames for the resolution targets will indicate that the file represents an image of the target, the resolution of the image, and the image type. For all filenames of resolution targets, the first 2 digits shall be **tg**; the third digit shall represent the resolution 2, 3, or 4 for resolutions of 200, 300, and 400 dpi, respectively; and the fourth and fifth digits shall represent the image type: **bt** for bitonal, **bh** for bitonal with halftone correction, **gr** for grayscale, and **co** for color. The filename extensions shall the same as those appropriate for each individual image type: tif or jpg. For example, the filename for an image of a resolution target scanned as a 300 dpi bitonal image with halftone correction shall be tg3bh.tif.

4.10

Filenames for SGML-Encoded, Machine-readable Texts and Associated Files

The filename for SGML-encoded, machine-readable text will be the item identifier followed by the extension sgm. The filename for Page Information Group file will be the item identifier followed by the extension pgi. The filename for the Reference file will be the item identifer followed by the extension .ref. The filename for the Omission Report file will be the item identifer followed by the extension .omi. The filename for Entity file will be the item identifier followed by the extension ent. This applies to all of the preceding naming schemes. For example:

Collection name
Example: Western Travel in Rare Books

Collection identifier
Example: wtrb

Book author and/or title
Example: White, Michael Claringbud. California all the way back to 1828.

LCCN: the Library of Congress catalog card number (a unique number)
Example: ca4-14356 (stored in computer as 04014356)

Book identifier
Example: 014356

SGML text filename
Example: 014356.sgm

Page Information Group file filename
Example: 014356.pgi

Reference file filename
Example: 014356.ref

Omission Report file filename
Example: 014356.omi

Entity file filename
Example: 014356.ent

Next.....Previous.....Return to Section J Table of Contents.....Return to the Table of Contents

ATTACHMENT 5

TIFF IMAGE FILE HEADER INFORMATION

The Library requires that "typical" or "expected" data be provided for most TIFF tags (normally, the data supplied by software default settings). The tags the Library has been using are listed below. Exceptions or options that may not conform to "typical" or default data are noted in the comments column.

Description	Tag	Comments
NewSubfileType	254	
ImageWidth	256	actual pixel count
ImageLength	257	actual pixel count
BitsPerSample	258	
Compression	259	
PhotometricInterpretation	262	
StripOffsets	273	
SamplesPerPixel	277	
RowsPerStrip	278	
StripByteCounts	279	
DocumentName	269	pathname (directory name and file name) as used for delivery of image
Artist	315	Library of Congress
DateTime	306	date and time scanned

5.1

TIFF header: tags 282, 283, and 296

The Library has used varying approaches for the 282, 283, and 296 tags. For a large number of grayscale digital images that reproduce photographs, the following tags were used:

XResolution	282	actual pixel count
YResolution	283	actual pixel count
ResolutionUnit	296	1 (no unit specified)

In previous contracts for printed matter scanned directly from paper, the following values appeared in these same tags:

XResolution	282	scanning resolution
YResolution	283	scanning resolution
ResolutionUnit	296	2

In other cases, the Library has received TIFF images for which no values have been supplied for these tags.

It is possible that certain printing anomalies (like "postage stamp" printing are due to the specific values placed in these TIFF header tags.

Next.....Previous.....Return to Section J Table of Contents.....Return to the Table of Contents

ATTACHMENT 6 HISTORICAL COLLECTIONS - DOCUMENT TYPE DEFINITION

```
<!-- DOCTYPE TEI2 [ -->


<!-- ********************************************************** -->
<!-- LIBRARY OF CONGRESS DTD                                    -->
<!-- Developed for: Library of Congress: Special Projects       -->
<!-- Developed by: ATLIS Consulting Group Inc.                  -->
<!-- Deborah A. Lapeyre and B.Tommie Usdin                      -->
<!-- Initial date: 11/20/92 (draft) Final 01/10/93              -->
<!-- ********************************************************** -->

<!-- ********************************************************** -->
<!-- Change History: 3/95 (RW)                                  -->
<!-- -->
<!-- 1. The attributes "Place" and "Anchor.ids" were added      -->
<!-- to the element <note>. -->
<!-- 2. The element <divisions>now has a "required" end         -->
<!-- tag.                                                       -->
<!-- 3. The attribute values "Superscript" and "Subscript"      -->
<!-- were removed from the attribute "Rend" found in            -->
<!-- the element <hi>.                                          -->
<!-- The attribute values "smallcaps" and "hunderscore"         -->
<!-- were added to the attribute "Rend" on the element <hi>.    -->
<!-- 4. The elements <superscript>and <subscript>were           -->
<!-- added. -->
<!-- 5. The entity %m.phrase; now includes the elements         -->
<!-- <superscript>and <subscript>.                              -->
<!-- 6. The content model for the element has                   -->
<!-- been adjusted to allow divisions and chunks to mix         -->
<!-- inside divisions.                                          -->
<!-- ********************************************************** -->
<!-- Change History: 7/95 (LEF, MTB)                            -->
<!-- 1. The attribute value "other" was added to the attribute  -->

<!-- "Rend" on the element <hi>.                                -->
<!-- 2. Added a NOTATION declaration for TIFF image files       -->
<!-- 3. Added a NOTATION declaration for PCX image files        -->
<!-- 4. Added a NOTATION declaration for GIF image files        -->
<!-- 5. Added a NOTATION declaration for JFIF image files       -->
<!-- 6. Added a NOTATION declaration for PDF image files        -->
<!-- 7. Added the attribute "Entity" to the elements            -->
<!-- <controlpgno>, <table>, and <illus>. The attribute         -->
```

```
<!-- value of "Entity" allows linking to image files             -->
<!-- through ENTITY references in the doctype declaration        -->
<!-- subset of the SGML document.                                -->
<!-- ********************************************************** -->
<!-- DTD Design Decisions (See Document Analysis Report)

     1.   DTD will follow the model of Text Encoding Initiative
          Guidelines (Reference: TEI P1 Ver 1, August 6, 1990
          and available portions of TEI P2, Ver 2, October, 1992)

     2.   Tags for cataloging information will not be included in DTD.

     3.   DTD must include the formatting information to display
          document in a reasonable manner, not produce facsimile
          of original.

     4.   Only elements useful for searching or simple formatting
          will be identified, and these will be constrained by cost.
          (For example, it is too expensive to identify geographic
          names.)

     5.   Elements may be defined for searching only, that will NOT
          be printable or usable in display.
-->
<!-- ********************************************************-->
<!-- NOTATION DECLARATIONS for Images                        -->
<!-- ********************************************************-->
<!NOTATION tif PUBLIC
    "-//Aldus Corporation//NOTATION Tagged Image File Format//EN" >
<!NOTATION pcx PUBLIC
    "-//ZSoft//NOTATION PCX: IBM  PC Raster Graphics Format//EN"  >
<!NOTATION gif PUBLIC
    "-//Compuserve Information Services//NOTATION Graphics Interchange
       Format//EN"                                                >
<!NOTATION jfif PUBLIC
    "ISO DIS 10918//NOTATION JPEG Graphics Format//EN"            >
<!NOTATION pdf PUBLIC
    "-//Adobe Inc.//NOTATION Portable Document Format//EN"        >
<!--******************************************************** -->
<!--         ENTITIES for CONTENT MODELS                     -->
<!-- ********************************************************-->
<!-- ********************************************************-->
<!-- PHRASE ELEMENTS (within a paragraph or chunk)           -->
<!--********************************************************-->
```

```
<!--            Phrase-level elements are low level elements,
          usually used for variant presentation, emphasis,
          highlighting, etc. Phrase-level elements must be
          used within paragraphs or paragraph-like elements.
-->
<!ENTITY % x.phrase "handwritten | stamped "                        >
<!ENTITY % m.phrase "%x.phrase; | add | del | hi |
                     superscript | subscript | omit | ref"         >

<!--   WHAT'S INSIDE A PHRASE-LEVEL ELEMENT                        -->
<!--         (char data or any of the other phrase elems)          -->
<!ENTITY % phrase.seq   "(#PCDATA |  %m.phrase;)*"                  >
<!--*********************************************************** -->
<!-- INTERMEDIATE ELEMS (within/between paragraphs)               -->
<!-- ***********************************************************-->

<!--        Elements that may occur both within paragraphs
          (& paragraph-level elements) & between such elements.
-->
<!ENTITY % x.inter "illus"                                          >
<!ENTITY % m.inter "%x.inter; | list | note"                        >

<!--*********************************************************** -->
<!--  PARAGRAPH-LEVEL (paragraph-like) ELEMENTS                   -->
<!-- ***********************************************************-->

<!--       CHUNKS: SAME LEVEL AS PARAGRAPH                        -->
<!ENTITY % x.chunk "ad | table "                                    >
<!ENTITY % m.chunk "%x.chunk; | p"                                  >

<!--    ALL THAT CAN BE AT SAME LEVEL AS PARA                      -->
<!ENTITY % chunk.seq  "(%m.inter; | %m.chunk;)*"                    >

<!--          WHAT'S INSIDE A PARAGRAPH                            -->
<!ENTITY % paraContent   "(#PCDATA | %m.inter; | %m.phrase;)* "     >
<!--          SPECIAL PARAGRAPH                                    -->
<!--             An element that may contain either a word or
                    phrase or a series of chunks. Used for notes,
                    etc. that may take either of 2 forms: character
                    data or paras.                                 -->
<!ENTITY % specialPara  "(((%m.chunk;),(%m.chunk; | %m.inter;)*) |
                         (%paraContent;) )"                         >

<!--*********************************************************** -->
<!--         ELEMENTS INSIDE A DIVISION                          -->
```

```
<!-- ************************************************************-->
<!-- ELEMENTS THAT START A DIVISION (at the top)                  -->
<!ENTITY % m.divtop "head"                                        >

<!--TEI entity m.divbot not used; there are no bottom elements  -->

<!--************************************************************ -->
<!--FLOATING ELEMENTS (occur anywhere in document)                -->
<!-- ************************************************************-->

<!ENTITY % float "anchor | hsep | lb | otherid | pageinfo | ref"  >

<!--************************************************************ -->
<!--               GLOBAL ATTRIBUTE VALUES -->
<!-- ************************************************************-->

<!--                   Global attributes have been attached to each
              element in the entire document, both in the
              TEI header and in the text.
-->
<!ENTITY % a.global "--Unique name (ID) used for referencing --
                ID        ID          #IMPLIED
            --In what language is this element      --
                lang      CDATA       #IMPLIED
                    --Number or label  --
 n          CDATA          #IMPLIED"                              >

<!--              NOTE: The rend attribute has been attached to
          each element in the text portion of the document.
          Rend is usually CDATA but is sometimes given
          explicit values (for example, for <hi> rend may
          take the values bold, italics,underscore, et. al.)
-->

<!-- ************************************************************-->
<!--            SPECIAL CHARACTER SETS                            -->
<!-- ************************************************************-->

<!-- The following public character entity sets are selected
     from those identified in ISO 8879.
-->

<!ENTITY % ISOlat1 PUBLIC
 "ISO 8879-1986//ENTITIES Added Latin 1//EN">
<!ENTITY % ISOlat2 PUBLIC
```

```
 "ISO 8879-1986//ENTITIES Added Latin 2//EN">
<!ENTITY % ISOgrk1 PUBLIC
 "ISO 8879-1986//ENTITIES Greek Letters//EN">
<!ENTITY % ISOgrk3 PUBLIC
 "ISO 8879-1986//ENTITIES Greek Symbols//EN">
<!ENTITY % ISOnum  PUBLIC
 "ISO 8879-1986//ENTITIES Numeric and Special Graphic//EN">
<!ENTITY % ISOdia  PUBLIC
 "ISO 8879-1986//ENTITIES Diacritical Marks//EN">
<!ENTITY % ISOpub  PUBLIC
 "ISO 8879-1986//ENTITIES Publishing//EN">
<!ENTITY % ISOtech PUBLIC
 "ISO 8879-1986//ENTITIES General Technical//EN">

%ISOlat1; %ISOlat2; %ISOgrk1; %ISOgrk3;
%ISOnum; %ISOdia; %ISOpub; %ISOtech;

<!--************************************************** -->
<!--              TEI HEADER ELEMENTS                   -->
<!-- **************************************************-->

<!ELEMENT TEI2       - -  (teiheader,text)                >

<!--        NOTE: Because the Library of Congress source documents
          are often described in full MARC cataloging records, the
          full TEI Header is not being used.  All optional portions
          of the header have been deleted in the Library of Congress
          DTD.                                                  -->
<!-- **************************************************-->
<!--              TEI HEADER ELEMENTS                   -->
<!-- **************************************************-->

<!--   ELEMENT   MIN  CONTENT   (EXCEPTIONS)              -->

<!ELEMENT teiheader   - -  (filedesc)                      >
<!ATTLIST teiheader   %a.global;
          --   What kind of document is this        --
         type      CDATA                          text
          --   Who created the TEI Header info      --
creator   CDATA                          #IMPLIED
          --   Is this header new or revised        --
     status    (new|update)                   new
          --   When was 1st version of hder created --
date.created CDATA                       #IMPLIED
```

```
          --   When was current ver. of hdr created --
  date.updated CDATA                        #IMPLIED              >

<!--*********************************************************-->
<!--         TEIHEADER: FILE DESCRIPTION                      -->
<!-- *********************************************************-->

<!--        Intent of the TEI is that this contain
          the full bibliographic description of
          the electronic file.
-->

<!ELEMENT filedesc    - -  (titlestmt,publicationstmt,sourcedesc+)>
<!ATTLIST filedesc    %a.global;                                 >

<!--*********************************************************-->
<!--         TEIHEADER: TITLE STATEMENT                       -->
<!-- *********************************************************-->

<!ELEMENT titlestmt   - O (title+,resp)                         >
<!ATTLIST titlestmt   %a.global;                                 >

<!--                  TITLE                                    -->
<!--                  TEI intent is to contain the chief name
              of the work,including alternative titles.
              For this implementation, the 1st title elem
              will hold the unique document ID number.
              Subsequent title elements will contain
              the title as obtained from the MARC
              records, with the appended suffix:
                   ": a machine-readable transcription."       -->
<!ELEMENT title       - O  (%phrase.seq;)                       >
<!ATTLIST title       %a.global;                                 >

<!--                  STATEMENT of RESPONSIBILITY              -->
<!--             Identifies the Library of Congress
                   as the creator of the machine readable
                   document. Boilerplate text, same for
                   all docs.                                   -->
<!ELEMENT resp        - O  ((role & name)+)                     >
<!ATTLIST resp        %a.global;                                 >

<!--                  ROLE: Nature of the Responsibility       -->
<!--             Defines LC's function in doc creation
                   Boilerplate text, same for all docs.
```

```
-->
<!ELEMENT role        - O  (%phrase.seq;)                          >
<!ATTLIST role        %a.global;                                   >

<!--                  NAME: Agency Responsible                  -->
<!--             Names the Library of Congress
                    as creator of the electronic document.
                    Boilerplate text, same for all docs.
-->

<!ELEMENT name        - O  (%phrase.seq;)                          >
<!ATTLIST name        %a.global;                                   >

<!--**************************************************************-->
<!--             TEIHEADER: PUBLICATION STATEMENT               -->
<!-- **************************************************************-->
<!--             Date and place of publication and
                    distribution for the electronic document.
                    Boilerplate text, same for all docs.       -->
<!ELEMENT publicationstmt  - O (p+)                                >
<!ATTLIST publicationstmt  %a.global;                              >
<!--elem    p    is defined in the GENERAL TEXT ELEMENTS        -->

<!-- **************************************************************-->
<!-- TEIHEADER: SOURCE DESCRIPTION                                 -->
<!-- **************************************************************-->

<!--              TEI intent is to contain bibliographic
                description of the source material from
                which the electronic text is derived.
                This will initially contain the LCCN and
                collection and copyright information.
                Eventually, this should contain tags for
                the info. from the MARC cataloging record.
-->
<!ELEMENT sourcedesc  - -  (lccn?,coll?,copyright?,p*)             >
<!ATTLIST sourcedesc  %a.global;                                   >
<!--elem    p is defined in the GENERAL TEXT ELEMENTS          -->

<!--             LIBRARY of CONGRESS CATALOG NUMBER             -->
<!ELEMENT lccn        - O  (#PCDATA)                               >
<!ATTLIST lccn        %a.global;                                   >

<!--                  COLLECTION                                -->
<!--                   (May include such information as
```

```
                    institution, division, collection name,
                    folder or call number.)                          -->
<!ELEMENT coll        - O  (#PCDATA)                                  >
<!ATTLIST coll        %a.global;                                      >

<!--                  COPYRIGHT INFORMATION                          -->
<!--                  (May include such information as
                    registration number, year, etc.)
-->
<!ELEMENT copyright   - O  (#PCDATA)                                  >
<!ATTLIST copyright   %a.global;                                      >

<!--*****************************************************-->
<!--         ELEMENTS WITHIN A DOCUMENT                  -->
<!-- *****************************************************-->

<!--   ELEMENT        MIN       CONTENT        (EXCEPTIONS)     -->
<!ELEMENT  text        - -     (front?,body?,back?)  +(%float;)   >
<!ATTLIST  text        %a.global;

                --   What kind of document  --
              type      (publication|manuscript)       #REQUIRED
          --Rendition: Document presentation/format --
              rend    (handwritten|typed|printed|mixed) #IMPLIED >
<!        --FRONT MATTER (usually in books)                       -->
<!ELEMENT   front       - O  ((%m.divtop;)*,(%chunk.seq;),div*)   >
<!ATTLIST   front       %a.global;

          --Rendition: How is element presented     --
              rend      CDATA                           #IMPLIED  >
<!      --BODY MATTER (main part of document)                     -->
<!ELEMENT   body        - O  ((%m.divtop;)*,(%chunk.seq;),div*)   >
<!ATTLIST   body        %a.global;
          --Rendition: How is element presented     --
              rend      CDATA                           #IMPLIED  >
<!        --BACK MATTER (usually in books)                        -->
<!ELEMENT   back        - O  ((%m.divtop;)*,(%chunk.seq;),div* )  >
<!ATTLIST   back        %a.global;
          --Rendition: How is element presented     --
              rend      CDATA                           #IMPLIED  >

<!--*****************************************************-->
<!--   HIERARCHICAL TEXT ELEMENTS (DIVISIONS)             -->
<!-- *****************************************************-->
```

```
<!ELEMENT   div         - -  ((%m.divtop;)*, (%chunk.seq; | div)*)>
<!ATTLIST   div         %a.global;
          --   Important kinds of divisions        --
               type     (bib|glossary|idinfo|index|listill|toc)
                                        #IMPLIED
          --Rendition: How is element presented     --
               rend      CDATA                    #IMPLIED       >

<!--*************************************************************-->
<!--            GENERAL TEXT ELEMENTS                            -->
<!-- ************************************************************-->
<!                  -- PARAGRAPH                                -->
<!ELEMENT   p           - O (%paraContent;)                      >
<!ATTLIST   p           %a.global;
          --Rendition: How is element presented     --
               rend      CDATA                         #IMPLIED  >

<!           --HEAD (A HEADING or TITLE)                        -->
<!ELEMENT   head        - O (%phrase.seq;)                       >
<!ATTLIST   head        %a.global;
          --Rendition: How is element presented     --
               rend      CDATA                         #IMPLIED  >

<!                     --LISTS -->
<!ELEMENT   list        - -  (head?,item+)                       >
<!ATTLIST   list        %a.global;
          --   What format style of list            --
               type      (bulleted|ordered|simple)      "simple"
          --Rendition: How is element presented     --
               rend      CDATA                         #IMPLIED  >

<!   --(paragraphs & anything at same level)                     -->
<!ELEMENT   item        - O  (%chunk.seq;)                       >
<!ATTLIST   item        %a.global;
          --Rendition: How is element presented     --
               rend      CDATA                         #IMPLIED  >

<!--*************************************************************-->
<!--WITHIN PARAGRAPHS: HIGHLIGHTING AND EMPHASIS                  -->
<!--*************************************************************-->

<!                  -- ADDED TEXT                                -->
<!ELEMENT   add         - -  (%specialPara;)                     >
<!ATTLIST   add         %a.global;
```

```
            --Where additional text is written --
              place     CDATA                    #IMPLIED
          --Rendition: How is element presented     --
              rend      CDATA                        #IMPLIED  >

<!                --DELETED TEXT                                -->
<!ELEMENT   del         - -  (%phrase.seq;)                      >
<!ATTLIST   del         %a.global;
          --Rendition: How is element presented     --
              rend      CDATA                        #IMPLIED  >

<!              --HANDWRITTEN TEXT                              -->
<!ELEMENT   handwritten - -  (%phrase.seq;)                      >
<!ATTLIST   handwritten %a.global;
          --Rendition: How is element presented     --
              rend      CDATA                        #IMPLIED  >

<!           --OMITTED or ILLEGIBLE TEXT                        -->
<!ELEMENT   omit    - O  EMPTY                                   >
<!ATTLIST   omit    %a.global;
              --Description of missing material --
              desc      CDATA                    #IMPLIED
              --   Why material was omitted     --
              reason    CDATA                    #IMPLIED
              --   How much is missing          --
              extent    CDATA                    #IMPLIED
           --Rendition: How is element presented  --
              rend      CDATA                    #IMPLIED        >

<!         --STAMP or PERFORATION MARKING                       -->
<!ELEMENT   stamped     - -  (%phrase.seq;)                      >
<!ATTLIST   stamped     %a.global;
          --Rendition: How is element presented     --
              rend      CDATA                        #IMPLIED  >

<!                  --HIGHLIGHTING (emphasis)                   -->
<!                  -- Used for text that stands out in some way
              because of the variant presentation, such
              as bold, italics, or centering. Does not
              imply emotional emphasis, just a change
              in presentation style.                           -->
<!ELEMENT   hi          - -  (%phrase.seq;)                      >
<!ATTLIST   hi          %a.global;
            -- Rendition: How is text highlighted --
```

```
              rend   (bold|italics|underscore|blockindent|hunderscore|
                   smallcaps|other)                        #IMPLIED  >

<!              --SUPERSCRIPTED TEXT                                  -->
<!ELEMENT   superscript        - -  (%phrase.seq;)                     >
<!ATTLIST   superscript        %a.global;                              >
<!              --SUBSCRIPTED TEXT                                    -->
<!ELEMENT   subscript          - -  (%phrase.seq;)                     >
<!ATTLIST   subscript          %a.global;                              >

<!--*************************************************************** -->
<!--PICTORIAL ELEMENTS(ILLUSTRATIONS, ADS, & TABLES)                  -->
<!-- ***************************************************************-->

<!     -- ILLUSTRATION (figure,picture, etc.)                        -->
<!ELEMENT   illus      - -  (caption?)                                 >
<!ATTLIST   illus      %a.global;
        -- ENTITY is pointer to image file --

              entity     ENTITY                           #IMPLIED
             --   Is this illustration a map? --
              map        (yes|no)                         "no"
          --Rendition: How is element presented     --
              rend       CDATA                            #IMPLIED  >

<!                  --CAPTION                                       -->
<!                  -- More than just the title of an illustrat.
              or table; may include source, author,
              description, etc. - any words associated
              with table or illus, not the text.
-->
<!ELEMENT   caption     - O  (%chunk.seq;)                           >
<!ATTLIST   caption     %a.global;
          --Rendition: How is element presented     --
              rend       CDATA                            #IMPLIED  >

<!                  --ADVERTISEMENT                                 -->
<!                  -- If complex, may be keyed in cells, as a
                   table is keyed                                   -->
<!ELEMENT   ad          - -  (%chunk.seq;|cell*)                     >
<!ATTLIST   ad          %a.global;
          --Rendition: How is element presented     --
              rend       CDATA                            #IMPLIED  >

<!--*************************************************************-->
```

```
<!                --TABLE ELEMENTS                                    -->
<!-- ***************************************************************-->

<!                    -- TABLE                                        -->
<!ELEMENT   table       - O  (caption?,tabletext)                      >
<!ATTLIST   table       %a.global;
        -- ENTITY is pointer to image file --

              entity    ENTITY                          #IMPLIED
          --Rendition: How is element presented     --
              rend      CDATA                           #IMPLIED   >

<!                    --TABLE TEXT                                    -->
<!                    -- Contains the text of all the cells in a
                    table, for searching purposes only and
                    NOT for formatting or display.                    -->

<!ELEMENT   tabletext    - -  (cell+)                                  >
<!ATTLIST   tabletext    %a.global;
          --Rendition: How is element presented     --
              rend      CDATA                            #IMPLIED  >

<!                    --CONTENTS of the CELLS in a TABLE              -->
<!                    -- Cells are used to hold the characters,
                    words, numbers, etc. - the text of the
                    table, for online searching. WILL NOT
                    be used for presentation                          -->
<!ELEMENT   cell         - O  (#PCDATA)                               >
<!ATTLIST   cell         %a.global;
          --Rendition: How is element presented     --
            rend      CDATA                             #IMPLIED    >

<!--*************************************************** -->
<!--NOTES: (INCLUDES FOOTNOTES, ENDNOTES, MARGINAL)                   -->
<!-- ***************************************************************-->

<!ELEMENT   note        - -  (%specialPara;)                          >
<!ATTLIST   note        %a.global;
          --Target: ID(s) of the referenced elem(s)--
              anchor.ids     IDREFS                 #IMPLIED
          --Rendition: How is element presented     --
              rend           CDATA                  #IMPLIED
    --To define where on the physical page the note appears--
              place          CDATA                  #IMPLIED      >
```

```
<!--*******************************************************-->
<!--FLOATING ELEMENTS (PAGE INFORMATION GROUP)               -->
<!-- *******************************************************-->

<!            -- PAGE INFORMATION GROUP                     -->
<!                  -- Pagination information that is entered
                  once per physical document page.          -->

<!ELEMENT   pageinfo    - -  (controlpgno,printpgno+,blankpage?)  >
<!ATTLIST   pageinfo    %a.global;
          --Rendition: How is element presented     --
            rend      CDATA                          #IMPLIED     >

<!             --CONTROL PAGINATION                         -->
<!                  -- For documents in which every page is
                  captured as an image, this is the
                  imaged page number, starting from 1.      -->

<!ELEMENT   controlpgno - O  CDATA                          >
<!ATTLIST   controlpgno %a.global;
        -- ENTITY is pointer to image file --

              entity    ENTITY                  #IMPLIED
          --Rendition: How is element presented     --
              rend      CDATA                   #IMPLIED      >

<!              --PRINT PAGE NUMBER                         -->
<!                  -- The page number as printed on the
                  original pages. This element may
                  repeat if there is more than 1 pg no.     -->
<!ELEMENT   printpgno   - O  CDATA                          >
<!ATTLIST   printpgno   %a.global;
          --Rendition: How is element presented     --
              rend      CDATA                     #IMPLIED      >

<!                --BLANK PAGE -->
<!                  -- Rarely used. Indicates the presence of a
              blank page in a document where  pages
              normally contain text and blank pages
              have been designated important by the
              collection preparer. NOT used when a
              document is merely printed one-sided.         -->

<!ELEMENT   blankpage   - O  EMPTY                          >
<!ATTLIST   blankpage   %a.global;
```

```
          --Rendition: How is element presented     --
              rend      CDATA                              #IMPLIED  >

<!--*****************************************************-->
<!--FLOATING ELEMENTS (FORMATTING, LINKING, OTHERID)             -->
<!-- *****************************************************-->
<!       -- LINE BREAK (Start of a new line)                    -->
<!                    -- Used when the line endings are unusual
                    or significant and must be preserve
                    (for example in poetry or advertising).     -->
<!ELEMENT   lb          - O  EMPTY                               >
<!ATTLIST   lb          %a.global;
          --Rendition: How is element presented     --
              rend      CDATA                        #IMPLIED       >

<!            --Horizontal Separation                            -->
<!                  -- Used to indicate spacing, tabs, or leader
                    dots between items that originally printed
                    on a single line.                           -->

<!ELEMENT   hsep        - O  EMPTY                               >
<!ATTLIST   hsep        %a.global;
          --Rendition: How is element presented     --
              rend      CDATA                        #IMPLIED       >

<!              --OTHER ID NUMBER                                -->
<!                  -- Documents originally issued or cataloged
                    outside the library may have an non-LC
                    identifying no., significant for searches.  -->

<!ELEMENT   otherid     - O  CDATA                               >
<!ATTLIST   otherid     %a.global;
          --Rendition: How is element presented     --
              rend      CDATA                        #IMPLIED       >

<!     --LINKS: Anchors (targets) and Pointers                   -->
<!                  -- for Hypertext links and note references.
              Can be parser checked by using ID/IDREF
                    mechanism or may contain pointer data.      -->
<!ELEMENT   anchor      - O  (#PCDATA)                           >
<!ATTLIST   anchor      %a.global;
          --Rendition: How is element presented     --
              rend      CDATA                        #IMPLIED       >

<!      --POINTER to ANCHOR or another object                    -->
```

```
<!ELEMENT   ref         - O  (%phrase.seq;)                        >
<!ATTLIST   ref         %a.global;
          --Target: ID(s) of the referenced elem(s) --
              target    IDREFS                    #IMPLIED
          --Rendition: How is element presented     --
              rend      CDATA                     #IMPLIED       >

<!--******************* End of the DTD ************************-->
<!--]> -->
```

Next... ..Previous.. ...Return to Section J Table of Contents ...Return to the Table of Contents

ATTACHMENT 7

KEYING INSTRUCTIONS

For an example of SGML-Encoded texts, refer to ATTACHMENT 3.

1.Text to key and tag:

- Unless otherwise instructed, all the words in the document, left to right, top bottom.

  Words are to be keyed in intelligent clusters. For example, text in each cell of a table should be keyed as a unit, rather than reading across a row and concatenating words in different table cells; Words are to be keyed exactly as they appear. Retain all the variant and incorrect spelling in the original text;

- Each first occurrence of letterhead;
- Text of advertisements, unless Document Instructions say to omit advertising text. (For complicated advertising formats, key the text as table text in cells.); and

- Masthead of a newspaper, telegram, etc.

2. Text that will NOT be keyed or retained:

- Running heads;
- Text in illustrations;
- Telephone book-style "ears";
- Hyphens that appear only because a word was too big to fit on a line (Note: When a word is hyphenated as the last word on the page, complete the word before beginning the page information group tags.);
- Letterhead (forms heads or personal printed stationery) except for each first appearance; and
- Immediate corrections. (Note: Where typos have been struck over, key the corrected letter and ignore the wrong letter.)

3. Marks to ignore during keying include:

- Incidental marks such as coffee stains, blood, doodles, fingerprints, etc.; Other types of marks, such as stamped, embossed and perforated marks, should be keyed and tagged appropriately.

4. Line breaks:

- Will be preserved only where they are unusual (title page text, for example) or important (poetry, for example).

5. Special characters:

- For non-ASCII characters (omega, less-than-or-equal symbol, smiley face, pointing hand, etc.), the keyers should key the character entity, if there is one, for example, ω and ≤. If there is no publicly declared entity (see ISO 8879 character sets), the contractor should insert "[???]";
- Illuminated characters (and other odd-sized or decorated letters) should be tagged as . The entire word should appear between the tags, not just the initial letter.

6. Standard attributes:

- The "creator" attribute for the should read: "Library of Congress"; and
- The "date.created" attribute for the should be set to current date.

7. Page numbers:

- All page numbers on a page will be keyed, using as many tags as necessary. An unnumbered page is indicated by empty tags;
- When tagging a page number, keep the number and discard any characters such as brackets, braces, or the word "page" that are used to set off the number. For example, all the following would be tagged as 3: PAGE:3 -3- {3} [3] -page 3-
- The sequential number of the page surface in the document (excluding blank pages), starting from 1, will be recorded in the element with padded zeroes to four digits; 0001 Controlpgno ENTITY values should consist of the image filename, without the extension.
- should be keyed at the beginning of a page, but not mid-word.

8. Letterhead:

- Every time there is letterhead that is not identical to that on the previous page (of a letter, for example), it should be keyed and tagged as text.

9. Rules, leader dots, and other spacing:

- Leader dots replace with an tag;
- Ellipses keyed as a series of periods;
- Vertical ellipses Use ISO special character entity;
- Rules, vines, borders, and other decorations ignore;
- Gaps in text, where items are not tabular but are deliberately and clearly separated by various amounts of white space replace all gaps, whatever the size, with the tag;

- Braces (grouping items) are the same as a table structure and should be keyed accordingly; and
- Spaces in between the letters spelling a word, usually on title pages of typed documents, should not be keyed. The text should be tagged as highlighted text.

10. Tagging of forms (where form is defined as preprinted questions or statements where a user response is required):

- The information supplied by the respondent does not stand alone; therefore both the full text of the "question" and the "answer" must be keyed and tagged;
- The boxes and blank lines on the form need not be keyed;
- Since images of the forms will always be supplied, there is no need to distinguish explicitly between the "question" and the "answer."

For example: goat ( ) dog (X) cat ( ) Should be keyed as:

- goat()
-
- dog(X)
-
- cat()

11. The tag - footnotes and endnotes:

- Footnote text, which is referenced in the document text and printed at the bottom of the page, will be tagged as and incorporated into the document text after the paragraph in which it is referenced. The tag will be used to mark the reference to the footnote where it occurs in the document text.
- Endnote text, which is referenced in the document text but printed at the end of a major division such as a chapter, will be tagged as and incorporated into the document text at the division end. The tag will be used to mark the reference to the endnote where it occurs in the document text.
- References to and shall be as follows: anchor ID="n0019-01" Always starts with n (for note), followed by the control page number (padded with zeroes to make a four digit number), followed by a hyphen, followed by 01, if it is the first or only note on that page. If it is the second note on that page, it will be n0019-02. Number all subsequent notes on the page in ascending order. Type the actual reference character or entity (e.g., *, 1, or &dag;) in between the start and end tags. note anchor.ids="n0019-01" The anchor.ids value should match exactly the ID value in the anchor tag. Type the actual reference character (e.g., *, 1, or &dag;)-- if it appears before the note text, at the beginning of the note text after the start tag. Subsequent anchor IDs for an established note should be numbered sequentially in the regular manner. Type the actual reference character or entity (e.g., *, 1,

or &dag;) in between the start and end tags.

12. Insertion of tags:

- Tags must never be inserted into the middle of a word; they should either surround the word or follow it.
- Tags must never replace a space between words.

13. Catch words:

- The odd words repeated at the end of a column or page of text to indicate the first word on the next column or page, will be treated as a new line of text, set off by the line break tag .

14. Columns:

- Treat newspaper-style columns by typing the first column top to bottom and then the second top to bottom, etc., page by page.
- Treat parallel columns by typing the entire first column even if it spans pages, then the entire second column, etc., unless there is significance to the horizontal placement - then treat it as table.

15. Bookplates:

- Key all the text contained in bookplates. Use (linebreak) to separate short lines of text.

16. Targets:

- Do not treat targets as the first page of a document. (Page images of targets should always have filenames that end with at least two zeroes, "00".)
- The text provided on the target should be keyed in the appropriate part of the document teiheader. Most targets will contain the text for the entire teiheader.

17. Typographical design of original:

- Do not try to mimic the typographical design or format of the original by using extra hard returns, spaces or other typing feats.

18. Text type:

- The National Digital Library Program uses only two attrributes values for the attribute "type" in the tag: publication or manuscript. The Library will specify which text type is

appropriate for each collection or set of documents. (This information is generally provided on document targets following header contents.)

20. Illustration and table ENTITY values:

- Illustration and table ENTITY values should consist of the image filename without the extension.

21. Title pages:

- Key the text on title pages using paragraph tags to indicate logical groupings of information. For example, for a centered title and author statement on a title page, begin with, type the text using to indicate where the lines end, and close the paragraph
- When the statement is complete. Using this approach, most title pages are likely to have at least one paragraph containing the title and author information and another paragraph containing the publication information.

22. Delivery of completed document texts:

- Each document must be provided to the Library in a single ASCII text file. If you break up a document into multiple parts for keying and/or tagging, you must reassemble it into a single file before delivery. Associated files for each document shall also be delivered in single, separate files for each document.

Next.....Previous.. ...Return to Section J Table of Contents.....Return to the Table of Contents

ATTACHMENT 8
SAMPLE ASSOCIATED FILES FOR SGML-ENCODED TEXTS

8.1

Page Information Group File Sample Information to be captured and reported: All tags and content within tags including and tags
Delivery: ASCII file, one for each SGML-encoded file
Name: SGML-encoded file name with .pgi extension

Sample file (name: 014356.pgi):

```
<pageinfo><controlpgno
entity="0001">001</controlpgno><printpgno></printpgno></pageinfo>
<pageinfo><controlpgno
entity="0002">002</controlpgno><printpgno></printpgno></pageinfo>
<pageinfo><controlpgno
entity="0003">003</controlpgno><printpgno></printpgno></pageinfo>
<pageinfo><controlpgno
entity="0004">004</controlpgno><printpgno></printpgno></pageinfo>
<pageinfo><controlpgno
entity="0005">005</controlpgno><printpgno>4</printpgno></pageinfo>
<pageinfo><controlpgno
entity="0006">006</controlpgno><printpgno>5</printpgno></pageinfo>
<pageinfo><controlpgno
entity="0007">007</controlpgno><printpgno>6</printpgno></pageinfo>
<pageinfo><controlpgno
entity="0008">008</controlpgno><printpgno>7</printpgno></pageinfo>
<pageinfo><controlpgno
entity="0009">009</controlpgno><printpgno>8</printpgno></pageinfo>
<pageinfo><controlpgno
entity="0010">010</controlpgno><printpgno>9</printpgno></pageinfo>
<pageinfo><controlpgno
entity="0011">011</controlpgno><printpgno>10</printpgno></pageinfo>
<pageinfo><controlpgno
entity="0012">012</controlpgno><printpgno>11</printpgno></pageinfo>
<pageinfo><controlpgno
entity="0013">013</controlpgno><printpgno>12</printpgno></pageinfo>
<pageinfo><controlpgno
entity="0014">014</controlpgno><printpgno>13</printpgno></pageinfo>
<pageinfo><controlpgno
entity="0015">015</controlpgno><printpgno>14</printpgno></pageinfo>
<pageinfo><controlpgno
entity="0016">016</controlpgno><printpgno>15</printpgno></pageinfo>
```

```
<pageinfo><controlpgno
entity="0017">017</controlpgno><printpgno>16</printpgno></pageinfo>
<pageinfo><controlpgno
entity="0018">018</controlpgno><printpgno>17</printpgno></pageinfo>
```

8.2
Reference File Sample

Information to be captured and reported Entity and ID attribute values for <illus>, <anchor> and <table>.
Delivery: ASCII file, one for each SGML-encoded file.
Name: SGML-encoded file name with .ref extension.
Sample file (named: 014356.ref):

```
---------- 014356.sgm
<illus entity="0001">
<illus entity="0005">
<illus entity="0010">
<illus entity="0012">
<illus entity="0025">
<illus entity="0033">
<illus entity="0034">
<illus entity="0037">
---------- 014356.sgm
<anchor id="n0006-01">
<anchor id="n0006-02">
<anchor id="n0006-03">
<anchor id="n0007-01">
<anchor id="n0010-01">
<anchor id="n0012-01">
<anchor id="n0012-02">
<anchor id="n0012-03">
<anchor id="n0012-04">
<anchor id="n0012-05">
<anchor id="n0014-01">
<anchor id="n0016-01">
---------- 014356.sgm
<table entity="0012">
<table entity="0014">
<table entity="0014">
<table entity="0015">
<table entity="0016">
```

```
<table entity="0017">
<table entity="0017">
<table entity="0018">
<table entity="0018">
```

8.3

Omission Report File Sample
Information to be captured and reported: Attribute values for <omit> tag and line number of location within file.
Delivery: ASCII file, one for each SGML-encoded file.
Name: SGML-encoded file name with .omi extension.
Sample file(named: 014356.omi):

```
---------- 014356.sgm
[841]<omit reason="illegible" extent="3 words">
[843]<omit reason="illegible" extent="2 words">
[845]<omit reason="illegible" extent="2 words">
[847]<omit reason="illegible" extent="2 words">
[849]<omit reason="illegible" extent="2 words">
[851]<omit reason="illegible" extent="1 word">
[853]<omit reason="illegible" extent="1 word">
[856]<omit reason="illegible" extent="1 word">
[858]<omit reason="illegible" extent="1 word">
[860]<omit reason="illegible" extent="1 word">
[862]<omit reason="illegible" extent="2 words">
[864]<omit reason="illegible" extent="2 words">
[866]<omit reason="illegible" extent="1 word">
[868]<omit reason="illegible" extent="1 word">
[870]<omit reason="illegible" extent="1 word">
[872]<omit reason="illegible" extent="1 word">
[874]<omit reason="illegible" extent="1 word">
[876]<omit reason="illegible" extent="1 word">
[881]<omit reason="illegible" extent="1 word">
[887]<omit reason="illegible" extent="1 word">
[898]<omit reason="illegible" extent="1 word">
[912]<omit reason="illegible" extent="1 word">
[923]<omit reason="illegible" extent="3 words">
[934]<omit reason="illegible" extent="1 word">
[946]<omit reason="illegible" extent="1 word">
[952]<omit reason="illegible" extent="1 word">
[954]<omit reason="illegible" extent="1 word">
```

```
[956]<omit reason="illegible" extent="1 word">
[958]<omit reason="illegible" extent="1 word">
```

8.4

ENTITY File Sample
Information to be captured and reported: All ENTITY values for <controlpgno>, <illus>, and <table>, mapped to actual filename.
Delivery: ASCII file, one for each SGML-encoded file
Name: SGML-encoded file name with .ent extension
Sample file (name: 014356.ent):

```
<entity 0001 system "0001.tif" ndata tif>
<entity 0002 system "0002.tif" ndata tif>
<entity 0003 system "0003.tif" ndata tif>
<entity 0004 system "0004.tif" ndata tif>
<entity 0005 system "0005.tif" ndata tif>
<entity 0006 system "0006.tif" ndata tif>
<entity 0007 system "0007.tif" ndata tif>
<entity 0008 system "0008.tif" ndata tif>
<entity 0009 system "0009.tif" ndata tif>
<entity 0010 system "0010.tif" ndata tif>
<entity 0011 system "0011.tif" ndata tif>
<entity 0012 system "0012.tif" ndata tif>
<entity 0013 system "0013.tif" ndata tif>
<entity 0014 system "0014.tif" ndata tif>
<entity 0015 system "0015.tif" ndata tif>
<entity 0016 system "0016.tif" ndata tif>
<entity 0017 system "0017.tif" ndata tif>
<entity 0018 system "0018.tif" ndata tif>
<entity 0019 system "0019.tif" ndata tif>
<entity 0020 system "0020.tif" ndata tif>
<entity 0021 system "0021.tif" ndata tif>
<entity 0022 system "0022.tif" ndata tif>
<entity 0023 system "0023.tif" ndata tif>
<entity 0024 system "0024.tif" ndata tif>
<entity 0025 system "0025.tif" ndata tif>
<entity 0026 system "0026.tif" ndata tif>
<entity 0027 system "0027.tif" ndata tif>
<entity 0028 system "0028.tif" ndata tif>
<entity 0029 system "0029.tif" ndata tif>
<entity 0030 system "0030.tif" ndata tif>
<entity 0031 system "0031.tif" ndata tif>
```

```
<entity 0032 system "0032.tif" ndata tif>
<entity 0033 system "0033.tif" ndata tif>
<entity 0034 system "0034.tif" ndata tif>
<entity 0035 system "0035.tif" ndata tif>
<entity 0036 system "0036.tif" ndata tif>
<entity 0037 system "0037.tif" ndata tif>
```

Next... ..Previous.. ...Return to Section J Table of Contents.. ...Return to the Table of Contents

ATTACHMENT 9

INFORMATION TO BE INCLUDED IN WORKFLOW TRACKING SYSTEM

The job of managing the progress of production batches and materials is complex and detailed. Constant communication between the Library and several vendors is crucial in order to keep accurate records of batches, rework, invoicing and payment. This system will take the form of a mutually accessible, networked database and will be designed to permit access by as many as ten (10) Library staff members as well as members of the contractor staff. These staff members will be identified by the Library and the vendor. Each individual will be provided password or other access by the Library. The vendor will enter such Library-generated data as is appropriate for the management system.

The Library system will be DOS or Windows compatible and will be accessible via Internet.

The Library anticipates the ability to batch load data into tables of the database. For example, a DOS directory list will contain a list of items that are to be inserted into the ITEM table.

The following list is not meant to be exhaustive, but to be illustrative of the kinds of data to be entered and which party has responsibility for its entry. Additional data elements may be added by the Library or requested by the vendor during the startup and testing activity.

Entity	Attribute	Responsible Party
COLLECTION	Agg_Name*	LC
	Cont_Desc	LC
	Orig_LC_Div	LC
	LC_Contact	LC
	Collection_name	LC
	Date_archived	LC
ITEM	Item_ID *	LC/VENDOR
	Type	LC/VENDOR
	Size	LC/VENDOR
	Convert (y/n)	LC
	Images_accepted	LC
	Text_accepted	LC
TEXT	Text_ID *	VENDOR
	Item_ID +	VENDOR

	Batch_ID +	VENDOR
	Num_characters	VENDOR
IMAGES	Image_ID *	VENDOR
	Item_ID +	VENDOR
	Image_type	VENDOR
	Image_size	VENDOR
	Batch_ID +	VENDOR
BATCH	Batch_ID *	VENDOR
	Volume_ID	VENDOR
	Vendor_name	VENDOR
	Date_processed	VENDOR
	Date_QC	VENDOR
	Date_LC_Received	LC
	Date_QA	LC
	Date_Accepted	LC
	Date_to_TConvert	VENDOR
	Date_from_TConvert	VENDOR
	Prearchive_Loc	LC
	Invoice_# +	VENDOR
REWORK	Rework_ID *	VENDOR
	Batch_ID +	VENDOR
	Volume_ID	VENDOR
	Date_processed	VENDOR
	Date_QC	VENDOR
	Date_LC_Received	LC
	Date_QA	LC
	Date_Accepted	LC
INVOICE	Invoice_# *	VENDOR
	Amount	VENDOR
	Invoice_date	VENDOR
	Date_approved	LC
	Date_paid	LC

NOTES:

* Primary Key
+ Foreign Key
Date format should be **mmddyyyy**.
VEN Indicates that vendor must enter data
LC Indicates that LC must enter data
LC/VENDOR Indicates that eith vendor or LC will enter data

Next... ..Previous.....Return to Section J Table of Contents.. ...Return to the Table of Contents

Physical Support for Bound Materials

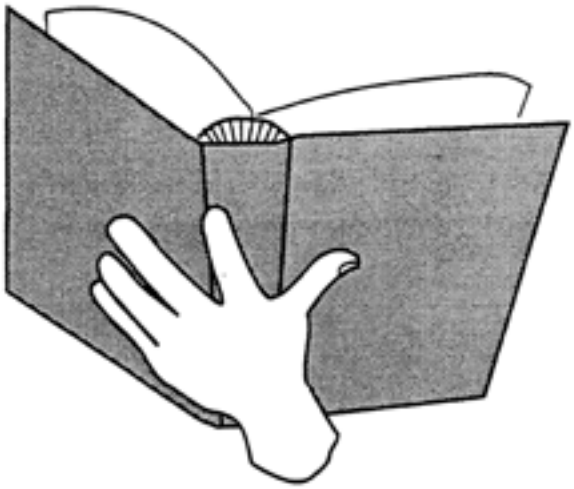

Book is open to an angle of approx. 130˚.

Bound Volume, c.1931 — Trade Binding — Weak Sewing, Hollow (case binding) Brittle Glue on Spine, 230 Pages

These drawings illustrate possible scanning positions and do not preclude offerors from proposing other methods or positions.

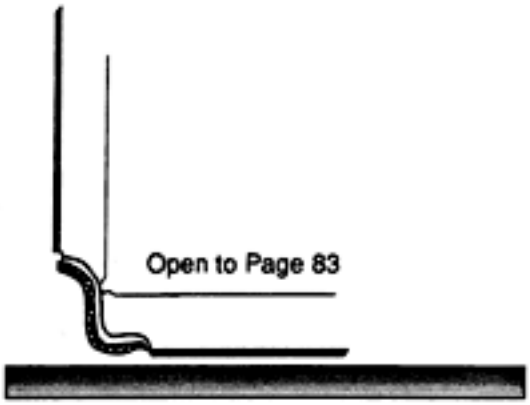

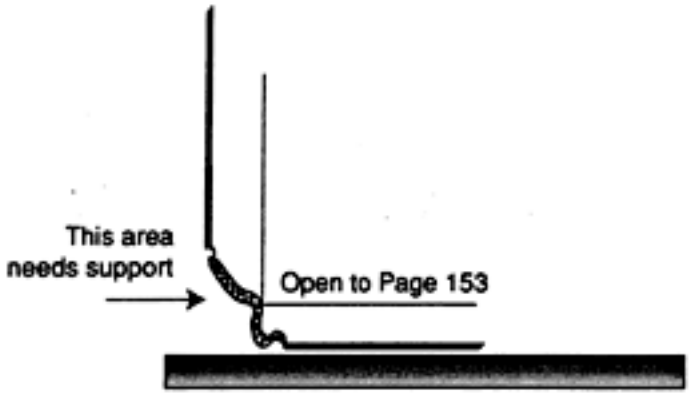

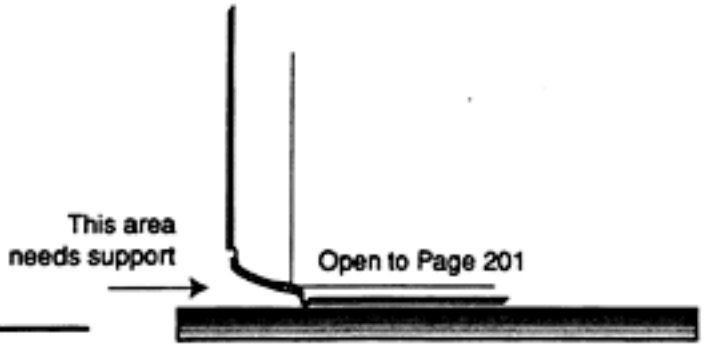

Bound Volume, c.1746 Sewn on Dry Raised Cords
Fragile Leather, Fairly Inflexible Cords, 410 Pages

These drawings illustrate possible scanning positions and do not preclude offerors from proposing other methods or positions.

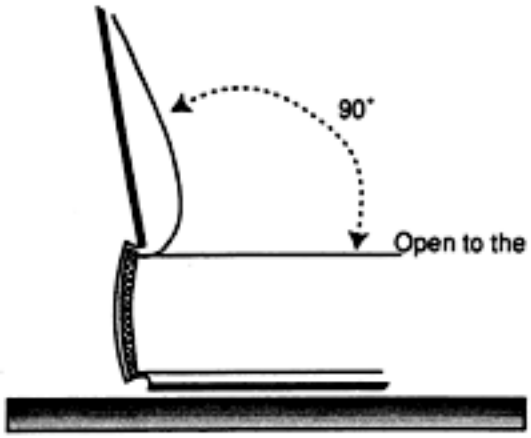

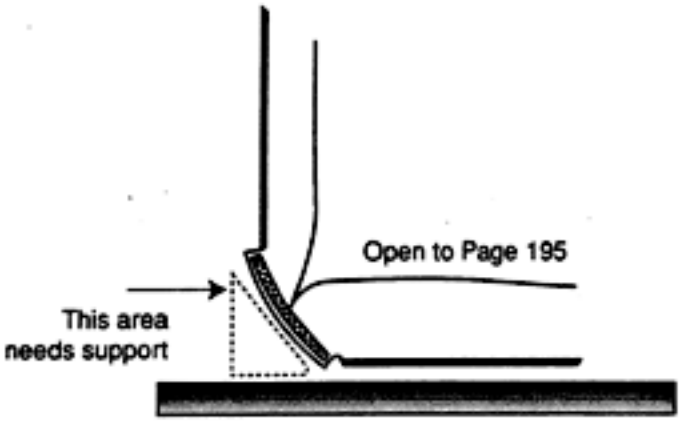

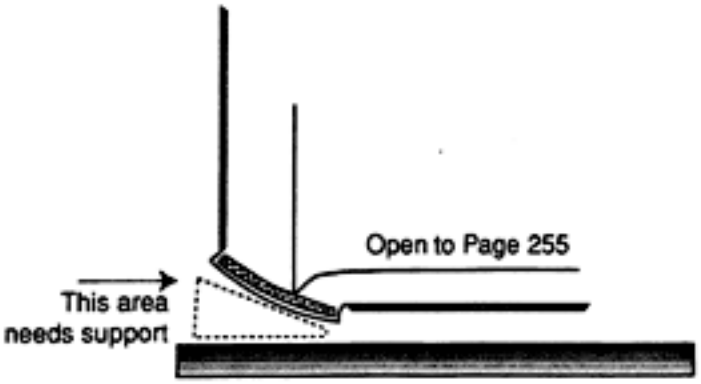

Next.. ...Previous.. ...Return to Section J Table of Contents.. ...Return to Table of Contents

PART IV - REPRESENTATION AND INSTRUCTIONS

SECTION K
REPRESENTATIONS, CERTIFICATIONS AND OTHER STATEMENTS OF OFFERORS0

K.1

52.203-2 CERTIFICATE OF INDEPENDENT PRICE DETERMINATION (APR 1985)

(a) The offeror certifies that -

(1) The prices in this offer have been arrived at independently, without, for the purpose of restricting competition,any consultation, communication, or agreement with any other offeror or competitor relating to (i) those prices, (ii) the intention to submit an offer, or (iii) the methods or factors used to calculate the prices offered;

(2) The prices in this offer have not been and will not be knowingly disclosed by the offeror, directly or indirectly, to any other offeror or competitor before bid opening (in the case of a sealed bid solicitation) or contractn the case of a negotiated solicitation) unless otherwise required by law; and

(3) No attempt has been made or will be made by the offeror to induce any other concern to submit or not to submit an offer for the purpose of restricting competition. (b) Each signature on the offer is considered to be a certification by the signatory that the signatory -

(1) Is the person in the offeror's organization responsible for determining the prices being offered in this bid or proposal, and that the signatory has not participated and will not participate in any action contrary to subparagraphs (a)(1) through (a)(3) above; or

(2)(i) Has been authorized, in writing, to act as agent for the following principals in certifying that those principals have not participated, and will not participate in any action contrary to subparagraphs (a)(1) through (a)(3) above:

_____

_____

[insert full name of person(s) in the offeror's organization responsible for determining the prices offered in this bid or proposal, and the title of his or her position in the offeror's organization];

ii) As an authorized agent, does certify that the principals named in subdivision (b)(2)(i) above have not participated, and will not participate, in any action contrary to subparagraphs (a)(1) through (a)(3) above; and

(iii) As an agent, has not personally participated, and will not participate, y ction contrary to

subparagraphs (a)(1) through (a)(3) above.

(c) If the offeror deletes or modifies subparagraph (a)(2) above, the offeror must furnish with its offer a signed statement setting forth in detail the circumstances of the disclosure.

K.2

52.203-4 CONTINGENT FEE REPRESENTATION AND AGREEMENT (APR 1984)

(a) Representation. The offeror represents that, except for full-time bona fide employees working solely for the offeror, the offeror -

[Note: The offeror must check the appropriate boxes. For interpretation of the representation, including the term "bona fide employee," see Subpart 3.4 of the Federal Acquisition Regulation.]

(1) [_] has, [_] has not employed or retained any person or company to solicit or obtain this contract; and

(2) [_] has, [_] has not paid or agreed to pay to any person or company employed or retained to solicit or obtain this contract any commission, percentage, brokerage, or other fee contingent upon or resulting from the award of this contract.

(b) Agreement. The offeror agrees to provide information relating to the above Representation as requested by the Contracting Officer and, when subparagraph (a)(1) or (a)(2) is answered affirmatively, to promptly submit to the Contracting Officer -

(1) A completed Standard Form 119, Statement of Contingent or Other Fees, (SF 119); or

(2) A signed statement indicating that the SF 119 was previously submitted to the same contracting office, including the date and applicable solicitation or contract number, and representing that the prior SF 119 applies to this offer or quotation.

K.3

52.203-8 REQUIREMENT FOR CERTIFICATE OF PROCUREMENT INTEGRITY. (SEP 1995) -- ALTERNATE I (SEP 1990)

(a) Definitions. The definitions at FAR 3.104-4 are hereby incorporated in this provision.

(b) Certifications. As required in paragraph (c) of this provision, the officer or employee responsible for this offer shall execute the following certification. The certification in paragraph (b)(2) of this provision is not required for a procurement of commercial items.

CERTIFICATE OF PROCUREMENT INTEGRITY

(1) I, _____ (Name of certifier), am the officer or employee responsible for the preparation of this offer and hereby certify that, to the best of my knowledge and belief, with the exception of any information described in this certificate, I have no information concerning a violation or possible violation of subsection 27(a), (b), (d), or (f) of the Office of Federal Procurement Policy Act, as amended* (41 U.S.C. 423), (hereinafter referred to as "the Act"), as implemented in the FAR, occurring during the conduct of this procurement _____ (solicitation number).

(2) As required by subsection 27(e)(1)(B) of the Act, I further certify that, to the best of my knowledge and belief, each officer, employee, agent, representative, and consultant of _____ (Name of Offeror) who has participated personally and substantially in the preparation or submission of this offer has certified that he or she is familiar with, and will comply with, the requirements of subsection 27(a) of the Act, as implemented in the FAR, and will report immediately to me any information concerning a violation or possible violation of subsections 27 (a), (b), (d), or (f) of the Act, as implemented in the FAR, pertaining to this procurement.

(3) Violations or possible violations: (Continue on plain bond paper if necessary and label Certificate of Procurement Integrity (Continuation Sheet), ENTER NONE IF NONE EXIST)

_____

_____

_____

_____

(4) I agree that, if awarded a contract under this solicitation, the certifications required by subsection 27(e)(1)(B) of the Act shall be maintained in accordance with paragraph (f) of this provision.

_____
(Signature of the officer or employee responsible for the offer and date)

(Typed name of the officer or employee responsible for the offer)

* Subsections 27 (a), (b), and (d) are effective on December 1, 1990. Subsection 27(f) is effective on June 1, 1991.

THIS CERTIFICATION CONCERNS A MATTER WITHIN THE JURISDICTION OF AN AGENCY OF THE UNITED STATES AND THE MAKING OF A FALSE, FICTITIOUS, OR FRAUDULENT CERTIFICATION MAY RENDER THE MAKER SUBJECT TO PROSECUTION UNDER TITLE 18,

UNITED STATES CODE, SECTION 1001.

(End of certification)

(c) For procurements, including contract modifications, in excess of $100,000 made using procedures other than sealed bidding, the signed certifications shall be submitted by the successful Offeror to the Contracting Officer within the time period specified by the Contracting Officer when requesting the certificates except as provided in subparagraphs (c)(1) through (c)(5) of this clause. In no event shall the certificate be submitted subsequent to award of a contract or execution of a contract modification:

(1) For letter contracts, other unpriced contracts, or unpriced contract modifications, whether or not the unpriced contract or modification contains a maximum or not to exceed price, the signed certifications shall be submitted prior to the award of the letter contract, unpriced contract, or unpriced contract modification, and prior to the definitization of the letter contract or the establishment of the price of the unpriced contract or unpriced contract modification. The second certification shall apply only to the period between award of the letter contract and execution of the document definitizing the letter contract, or award of the unpriced contract or unpriced contract modification and execution of the document establishing the definitive price of such unpriced contract or unpriced contract modification.

(2) For basic ordering agreements, prior to the execution of a priced order; prior to the execution of an unpriced order, whether or not the unpriced order contains a maximum or not to exceed price; and, prior to establishing the price of an unpriced order. The second certificate to be submitted for unpriced orders shall apply only to the period between award of the unpriced order and execution of the document establishing the definitive price for such order.

(3) A certificate is not required for indefinite delivery contracts (see Subpart 16.5) unless the total estimated value of all orders eventually to be placed under the contract is expected to exceed $100,000.

(4) For contracts and contract modifications which include options, a certificate is required when the aggregate value of the contract or contract modification and all options (see 3.104-4(e)) exceeds $100,000.

(5) For purposes of contracts entered into under section 8(a) of the SBA, the business entity with whom the SBA contracts, and not the SBA, shall be required to comply with the certification requirements of subsection 27(e). The SBA shall obtain the signed certificate from the business entity and forward the certificate to the Contracting Officer prior to the award of a contract to the SBA.

(6) Failure of an Offeror to submit the signed certificate within the time prescribed by the Contracting Officer shall cause the offer to be rejected.

(d) Pursuant to FAR 3.104-9(d), the Offeror may be requested to execute additional certifications

at the request of the Government. Failure of an Offeror to submit the additional certifications shall cause its offer to be rejected.

(e) A certification containing a disclosure of a violation or possible violation will not necessarily result in the withholding of award under this solicitation. However, the Government, after evaluation of the disclosure, may cancel this procurement or take any other appropriate actions in the interests of the Government, such as disqualification of the Offeror.

(f) In making the certification in paragraph (2) of the certificate, the officer or employee of the competing contractor responsible for the offer may rely upon a one-time certification from each individual required to submit a certification to the competing contractor, supplemented by periodic training. These certifications shall be obtained at the earliest possible date after an individual required to certify begins employment or association with the contractor. If a contractor decides to rely on a certification executed prior to the suspension of section 27 (i.e., prior to December 1, 1989), the Contractor shall ensure that an individual who has so certified is notified that section 27 has been reinstated. These certifications shall be maintained by the Contractor for 6 years from the date a certifying employee's employment with the company ends or, for an agent, representative, or consultant, 6 years from the date such individual ceases to act on behalf of the Contractor.

(g) Certifications under paragraphs (b) and (d) of this provision are material representations of fact upon which reliance will be placed in awarding a contract.

K.4

52.203-11 CERTIFICATION AND DISCLOSURE REGARDING PAYMENTS TO INFLUENCE CERTAIN FEDERAL TRANSACTIONS (APR 1991)

(a) The definitions and prohibitions contained in the clause, at FAR 52.203-12, Limitation on Payments to Influence Certain Federal Transactions, included in this solicitation, are hereby incorporated by reference in paragraph (b) of this certification.

(b) The offeror, by signing its offer, hereby certifies to the best of his or her knowledge and belief that on or after December 23, 1989

(1) No Federal appropriated funds have been paid or will be paid to any person for influencing or attempting to influence an officer or employee of any agency, a Member of Congress, an officer or employee of Congress, or an employee of a Member of Congress on his or her behalf in connection with the awarding of any Federal contract, the making of any Federal grant, the making of any Federal loan, the entering into of any cooperative agreement, and the extension, continuation, renewal, amendment or modification of any Federal contract, grant, loan, or cooperative agreement;

(2) If any funds other than Federal appropriated funds (including profit or fee received under a covered Federal transaction) have been paid, or will be paid, to any person for influencing or attempting to influence an officer or employee of any agency, a Member of Congress, an officer or employee of Congress, or an employee of a Member of Congress on his or her behalf in

connection with this solicitation, the offeror shall complete and submit, with its offer, OMB standard form LLL, Disclosure of Lobbying Activities, to the Contracting Officer; and

(3) He or she will include the language of this certification in all subcontract awards at any tier and require that all recipients of subcontract awards in excess of $100,000 shall certify and disclose accordingly.

(c) Submission of this certification and disclosure is a prerequisite for making or entering into this contract imposed by section 1352, title 31, United States Code. Any person who makes an expenditure prohibited under this provision or who fails to file or amend the disclosure form to be filed or amended by this provision, shall be subject to a civil penalty of not less than $10,000, and not more than $100,000, for each such failure.

K.5

52.204-3 TAXPAYER IDENTIFICATION (MAR 1994)

(a) Definitions. "Common parent," as used in this solicitation provision, means that corporate entity that owns or controls an affiliated group of corporations that files its Federal income tax returns on a consolidated basis, and of which the offeror is a member. "Corporate status," as used in this solicitation provision, means a designation as to whether the offeror is a corporate entity, an unincorporated entity (e.g., sole proprietorship or partnership), or a corporation providing medical and health care services. "Taxpayer Identification Number (TIN)," as used in this solicitation provision, means the number required by the IRS to be used by the offeror in reporting income tax and other returns.

(b) All offerors are required to submit the information required in paragraphs (c) through (e) of this solicitation provision in order to comply with reporting requirements of 26 U.S.C. 6041, 6041A, and 6050M and implementing regulations issued by the Internal Revenue Service (IRS). If the resulting contract is subject to the reporting requirements described in 4.903, the failure or refusal by the offeror to furnish the information may result in a 31 percent reduction of payments otherwise due under the contract.

(c) Taxpayer Identification Number (TIN).

[_] TIN:
[_] TIN has been applied for.
[_] TIN is not required because:
[_] Offeror is a nonresident alien foreign corporation, or foreign partnership that does not have income effectively connected with the conduct of a trade or business in the U.S. and does not have an office or place of business or a fiscal paying agent in the U.S.;
[_] Offeror is an agency or instrumentality of a foreign government;
[_] Offeror is an agency or instrumentality of a Federal, state, or local government;
[_] Other. State basis

(d) Corporate Status.

[_] Corporation providing medical and health care services, or engaged in the billing and collecting of payments for such services;
[_] Other corporate entity;
[_] Not a corporate entity;
[_] Sole proprietorship
[_] Partnership
[_] Hospital or extended care facility described in 26 CFR 501(a).

(e) Common Parent.

[_] Offeror is not owned or controlled by a common parent as defined in paragraph (a) of this clause.
[_] Name and TIN of common parent:
Name_____
TIN_____

K.6

52.204-5 WOMEN-OWNED BUSINESS. (OCT 1995)

(a) Representation. The offeror represents that it [ ] is, [ ] is not a women-owned business concern.

(b) Definition. "Women-owned business concern," as used in this provision, means a concern which is at least 51 percent owned by one or more women; or in the case of any publicly owned business, at least 51 percent of the stock of which is owned by one or more women; and whose management and daily business operations are controlled by one or more women.

K.7

52.209-5 CERTIFICATION REGARDING DEBARMENT, SUSPENSION, PROPOSED DEBARMENT, AND OTHER RESPONSIBILITY MATTERS (MAY 1989)

(a) (1) The Offeror certifies, to the best of its knowledge and belief, that--

(i) The offeror and/or any of its Principals--

(A) Are [_] are not [_] presently debarred, suspended, proposed for debarment, or declared ineligible for the award of contracts by any Federal agency;

(B) Have [_] have not [_], within a three-year period preceding this offer, been convicted of or had a civil judgement rendered against them for: commission of fraud or a criminal offense in connection with obtaining, attempting to obtain, or performing a public (Federal, state, or local) contract or subcontract; violation of Federal or state antitrust statutes relating to the submission of offers; or commission of embezzlement, theft, forgery, bribery, falsification or destruction of records, making false statements, or receiving stolen property; and

(C) Are [_] are not [_] presently indicted for, or otherwise criminally or civilly charged by a governmental entity with, commission of any of the offenses enumerated in subdivision (a)(1)(i)(B) of this provision.

(ii) The Offeror has [_] has not [_], within a three-year period preceding this offer, had one or more contracts terminated for default by any federal agency.

(2) "Principals," for the purposed of this certification, means officer; directors; owner; partners; and, persons having primary management or supervisory responsibilities within a business entity (e.g., general manager; plant manager; head of a subsidiary, division, or business segment, and similar positions).

THIS CERTIFICATION CONCERNS A MATTER WITHIN THE JURISDICTION OF AN AGENCY OF THE UNITED STATES AND THE MAKING A FALSE, FICTITIOUS, OR FRAUDULENT CERTIFICATION MAY RENDER THE MAKER SUBJECT TO PROSECUTION UNDER SECTION 1001, TITLE 18, UNITED STATES CODE.

K.8

52.215-6 TYPE OF BUSINESS ORGANIZATION (JUL 1987)

The offeror or quoter, by checking the applicable box, represents that - (a) It operates as [_] a corporation incorporated under the laws of the State of _____ [_] an individual, [_] a partnership, [_] a nonprofit organization, or [_] a joint venture; or

(b) If the offeror or quoter is a foreign entity, it operates as [_] an individual, [_] a partnership, [_] a nonprofit organization, [_] a joint venture, or [_] a corporation, registered for business in _____ (country).

K.9

52.215-20 PLACE OF PERFORMANCE (APR 1984)

(a) The offeror or quoter, in the performance of any contract resulting from this solicitation, [_] intends, [_] does not intend (check applicable block) to use one or more plants or facilities located at a different address from the address of the offeror or quoter as indicated in this proposal or quotation.

(b) If the offeror or quoter checks "intends" in paragraph (a) above, it shall insert in the spaces provided below the required information: Place of Performance Name and Address of Owner (Street

Address, City, County, and Operator of the Plant State, Zip Code) or Facility if Other than Offeror or Quoter

K.10

52.219-1 SMALL BUSINESS PROGRAM REPRESENTATIONS. (OCT 1995)

(a)(1) The standard industrial classification (SIC) code for this acquisition is [7375].

(2) The small business size standard is $14.5 million.

(3) The small business size standard for a concern which submits an offer in its own name, other than on a construction or service contract, but which proposes to furnish a product which it did not itself manufacture, is 500 employees.

(b) Representations.

(1) The offeror represents and certifies as part of its offer that it [ ] is, [ ] is not a small business concern.

(2) (Complete only if offeror represented itself as a small business concern in block (b)(1) of this section.) The offeror represents as part of its offer that it [ ] is, [ ] is not a small disadvantaged business concern.

(3) (Complete only if offeror represented itself as a small business concern in block (b)(1) of this section.) The offeror represents as part of its offer that it [ ] is, [ ] is not a women-owned small business concern.

(c) Definitions. Small business concern, as used in this provision, means a concern, including its affiliates, that is independently owned and operated, not dominant in the field of operation in which it is bidding on Government contracts, and qualified as a small business under the criteria in 13 CFR Part 121 and the size standard in paragraph (a) of this provision.

Small disadvantaged business concern, as used in this provision, means a small business concern that (1) is at least 51 percent unconditionally owned by one or more individuals who are both socially and economically disadvantaged, or a publicly owned business having at least 51 percent of its stock unconditionally owned by one or more socially and economically disadvantaged individuals, and (2) has its management and daily business controlled by one or more such individuals. This term also means a small business concern that is at least 51 percent unconditionally owned by an economically disadvantaged Indian tribe or Native Hawaiian Organization, or a publicly owned business having at least 51 percent of its stock unconditionally owned by one or more of these entities, which has its management and daily business controlled by members of an economically disadvantaged Indian tribe or Native Hawaiian Organization, and which meets the requirements of 13 CFR Part 124.

Women-owned small business concern, as used in this provision, means a small business concern--

(1) Which is at least 51 percent owned by one or more women or, in the case of any publicly owned business, at least 51 percent of the stock of which is owned by one or more women; and

(2) Whose management and daily business operations are controlled by one or more women.

(d) Notice. (1) If this solicitation is for supplies and has been set aside, in whole or in part, for small business concerns, then the clause in this solicitation providing notice of the set-aside contains restrictions on the source of the end items to be furnished.

(2) Under 15 U.S.C. 645(d), any person who misrepresents a firm's status as a small or small disadvantaged business concern in order to obtain a contract to be awarded under the preference programs established pursuant to sections 8(a), 8(d), 9, or 15 of the Small Business Act or any other provision of Federal law that specifically references section 8(d) for a definition of program eligibility, shall--

(i) Be punished by imposition of fine, imprisonment, or both;
(ii) Be subject to administrative remedies, including suspension and debarment; and
(iii) Be ineligible for participation in programs conducted under the authority of the Act.

K.11

52.222-19 WALSH-HEALEY PUBLIC CONTRACTS ACT REPRESENTATION (APR 1984)

The offeror represents as a part of this offer that the offeror is_____or is not_____ a regular dealer in, or is_____or is not_____a manufacturer of, the supplies offered.

K.12

52.222-21 CERTIFICATION OF NONSEGREGATED FACILITIES (APR 1984)

(a) "Segregated facilities," as used in this provision, means any waiting rooms, work areas, rest rooms and wash rooms, restaurants and other eating areas, time clocks, locker rooms and other storage or dressing areas, parking lots, drinking fountains, recreation or entertainment areas, transportation, and housing facilities provided for employees, that are segregated by explicit directive or are in fact segregated on the basis of race, color, religion, or national origin because of habit, local custom, or otherwise.

(b) By the submission of this offer, the offeror certifies that it does not and will not maintain or provide for its employees any segregated facilities at any of its establishments, and that it does not and will not permit its employees to perform their services at any location under its control where segregated

facilities are maintained. The offeror agrees that a breach of this certification is a violation of the Equal Opportunity clause in the contract.

(c) The offeror further agrees that (except where it has obtained identical certifications from proposed subcontractors for specific time periods) it will -

(1) Obtain identical certifications from proposed subcontractors before the award of subcontracts under which the subcontractor will be subject to the Equal Opportunity clause;
(2) Retain the certifications in the files; and
(3) Forward the following notice to the proposed subcontractors (except if the proposed subcontractors have submitted identical certifications for specific time periods):

NOTICE TO PROSPECTIVE SUBCONTRACTORS OF REQUIREMENT FOR CERTIFICATIONS OF NONSEGREGATED FACILITIES.

A Certification of Nonsegregated Facilities must be submitted before the award of a subcontract under which the subcontractor will be subject to the Equal Opportunity clause. The certification may be submitted either for each subcontract or for all subcontracts during a period (i.e., quarterly, semiannually, or annually).

NOTE: The penalty for making false statements in offers is prescribed in 18 U.S.C. 1001.

K.13

52.222-22 PREVIOUS CONTRACTS AND COMPLIANCE REPORTS (APR 1984)

The offeror represents that -

(a) It [_] has, [_] has not participated in a previous contract or subcontract subject either to the Equal Opportunity clause of this solicitation, the clause originally contained in Section 310 of Executive Order No. 10925, or the clause contained in Section 201 of Executive Order No. 11114;
(b) It [_] has, [_] has not, filed all required compliance reports; and
(c) Representations indicating submission of required compliance reports, signed by proposed subcontractors, will be obtained before subcontract awards.

K.14

52.222-25 AFFIRMATIVE ACTION COMPLIANCE (APR 1984)

The offeror represents that -

(a) it [_] has developed and has on file, [_] has not developed and does not have on file, at each establishment, affirmative action programs required by the rules and regulations of the Secretary of Labor (41 CFR 60-1 and 60-2), or

(b) it [_] has not previously had contracts subject to the written affirmative action programs requirement of the rules and regulations of the Secretary of Labor.

K.15

52.223-1 CLEAN AIR AND WATER CERTIFICATION (APR 1984)

The offeror certifies that--

(a) Any facility to be used in the performance of this proposed contract is [_], is not [_] listed on the Environmental Protection Agency List of Violating Facilities;

(b) The offeror will immediately notify the Contracting Officer, before award, of the receipt of any communication from the Administrator, or a designee, of the Environmental Protection Agency, indicating that any facility that the Offeror proposes to use for the performance of the contract is under consideration to be listed on the EPA List of Violating Facilities; and

(c) The offeror will include a certification substantially the same as this certification, including this paragraph (c), in every non-exempt subcontract.

K.16

52.223-5 CERTIFICATION REGARDING A DRUG-FREE WORKPLACE. (JUL 1995)

(a) Definitions. As used in this provision,

"Controlled substance" means a controlled substance in schedules I through V of section 202 of the Controlled Substances Act (21 U.S.C. 812) and as further defined in regulation at 21 CFR 1308.11-1308.15.

"Conviction" means a finding of guilt (including a plea of nolo contendere) or imposition of sentence, or both, by any judicial body charged with the responsibility to determine violations of the Federal or State criminal drug statutes.

"Criminal drug statute" means a Federal or non-Federal criminal statute involving the manufacture, distribution, dispensing, possession or use of any controlled substance.

"Drug-free workplace" means the site(s) for the performance of work done by the Contractor in connection with a specific contract at which employees of the Contractor are prohibited from engaging in the unlawful manufacture, distribution, dispensing, possession, or use of a controlled substance.

"Employee" means an employee of a Contractor directly engaged in the performance of work under a Government contract. Directly engaged is defined to include all direct cost employees and any other Contractor employee who has other than a minimal impact or involvement in contract performance.

"Individual" means an offeror/contractor that has no more than one employee including the offeror/contractor.

(b) By submission of its offer, the offeror (other than an individual) responding to a solicitation that is expected to exceed the simplified acquisition threshold, certifies and agrees, that with respect to all employees of the offeror to be employed under a contract resulting from this solicitation, it will--no later than 30 calendar days after contract award (unless a longer period is agreed to in writing), for contracts of 30 calendar days or more performance duration; or as soon as possible for contracts of less than 30 calendar days performance duration, but in any case, by a date prior to when performance is expected to be completed--

(1) Publish a statement notifying such employees that the unlawful manufacture, distribution, dispensing, possession or use of a controlled substance is prohibited in the Contractor's workplace and specifying the actions that will be taken against employees for violations of such prohibition;

(2) Establish an ongoing drug-free awareness program to inform such employees about -

(i) The dangers of drug abuse in the workplace;

(ii) The Contractor's policy of maintaining a drug-free workplace;

(iii) Any available drug counseling, rehabilitation, and employee assistance programs; and

(iv) The penalties that may be imposed upon employees for drug abuse violations occurring in the workplace;

(3) Provide all employees engaged in performance of the contract with a copy of the statement required by subparagraph (b)(1) of this provision;

(4) Notify such employees in writing in the statement required by subparagraph (b)(1) of this provision that, as a condition of continued employment on the contract resulting from this solicitation, the employee will -

(i) Abide by the terms of the statement; and
(ii) Notify the employer in writing of the employee's conviction under a criminal drug statute for a violation occurring in the workplace no later than 5 calendar days after such conviction;

(5) Notify the Contracting Officer in writing within 10 calendar days after receiving notice under subdivision(b)(4)(ii) of this provision, from an employee or otherwise receiving actual notice of such conviction. The notice shall include the position title of the employee; and

(6) Within 30 calendar days after receiving notice under subdivision (b)(4)(ii) of this provision of a conviction, take one of the following actions with respect to any employee who is convicted of a drug abuse violation occurring in the workplace:

> (i) Take appropriate personnel action against such employee, up to and including termination; or
> (ii) Require such employee to satisfactorily participate in a drug abuse assistance or rehabilitation program approved for such purposes by a Federal, State, or local health, law enforcement, or other appropriate agency.

(7) Make a good faith effort to maintain a drug-free workplace through implementation of subparagraphs (b)(1) through (b)(6) of this provision.

(c) By submission of its offer, the offeror, if an individual who is making an offer of any dollar value, certifies and agrees that the offeror will not engage in the unlawful manufacture, distribution, dispensing, possession, or use of a controlled substance in the performance of the contract resulting from this solicitation.

(d) Failure of the offeror to provide the certification required by paragraph (b) or (c) of this provision, renders the offeror unqualified and ineligible for award. (See FAR 9.104-1(g) and 19.602-1(a)(2)(i).)

(e) In addition to other remedies available to the Government, the certification in paragraphs (b) or (c) of this provision concerns a matter within the jurisdiction of an agency of the United States and the making of a false, fictitious, or fraudulent certification may render the maker subject to prosecution under title 18, United States Code, section 1001.

K.17

52.230-1 COST ACCOUNTING STANDARDS NOTICES AND CERTIFICATION. (NOV 1993)

Note: This notice does not apply to small businesses or foreign governments. This notice is in three parts, identified by Roman numerals I through III.

Offerors shall examine each part and provide the requested information in order to determine Cost Accounting Standards (CAS) requirements applicable to any resultant contract.

I. Disclosure Statement - Cost Accounting Practices and Certification

(a) Any contract in excess of $500,000 resulting from this solicitation, except contracts in which the price negotiated is based on (1) established catalog or market prices of commercial items sold in substantial quantities to the general public, or (2) prices set by law or regulation, will be subject to the requirements of 48 CFR parts 9903 and 9904, except for those contracts which are exempt as specified in 48 CFR, Subpart 9903,201-1.

(b) Any offeror submitting a proposal which, if accepted, will result in a contract subject to the requirements of 48 CFR parts 9903 and 9904 must, as a condition of contracting, submit a Disclosure Statement as required by 48 CFR Subpart 9903.202. The Disclosure Statement must be submitted as a part of the offeror's proposal under this solicitation unless the offeror has already submitted a Disclosure Statement disclosing the practices used in connection with the pricing of this proposal. If an applicable Disclosure Statement has already been submitted, the offeror may satisfy the requirement for submission by providing the information requested in paragraph (c) of Part I of this provision. Caution: In the absence of specific regulations or agreement, a practice disclosed in a Disclosure Statement shall not, by virtue of such disclosure, be deemed to be a proper, approved, or agreed-to-practice for pricing proposals or accumulating and reporting contract performance cost data.

(c) Check the appropriate box below:

_____ (1) Certificate of Concurrent Submission of Disclosure Statement.

The offeror hereby certifies that, as a part of the offer, copies of the Disclosure Statement have been submitted as follows: (i) original and one copy of the cognizant Administrative Contracting Officer (ACO), and (ii) one copy to the cognizant contract auditor.

(Disclosure must be on Form No. CASB DS-1. Forms may be obtained from the cognizant ACO or from the loose-leaf version of the Federal Acquisition Regulation.)

Date of Disclosure Statement:

_____

Name and Address of Cognizant ACO where filed: _____

The offeror further certifies that practices used in estimating costs in pricing this proposal are consistent with the cost accounting practices disclosed in the Disclosure Statement.

_____ (2) Certificate of Previously Submitted Disclosure Statement. The offeror hereby certifies that Disclosure Statement was filed as follows:

Date of Disclosure Statement:

_____ Name and Address of Cognizant

ACO where filed: _____ The offeror further certifies that the practices used in estimating costs in pricing this proposal are consistent with the cost accounting practices disclosed in the applicable disclosure statement.

_____ (3) Certificate of Monetary Exemption.

The offeror hereby certifies that the offeror, together with all divisions, subsidiaries, and affiliates under common control, did not receive net awards of negotiated prime contracts and subcontracts subject to CAS totaling more than $25 million (of which at least one award exceeded $1 million) in the cost accounting period immediately preceding the period in which this proposal was submitted. The offeror further certifies that if such status changes before an award resulting from this proposal, the offeror will advise the Contracting Officer immediately.

_____ (4) Certificate of Interim Exemption.

The offeror hereby certifies that (i) the offeror first exceeded the monetary exemption for disclosure, as defined in (3) of this subsection, in the cost accounting period immediately preceding the period in which this offer was submitted and (ii) in accordance with 48 CFR, Subpart 9903.202-1, the offeror is not yet required to submit a Disclosure Statement. The offeror further certifies that if an award resulting from this proposal has not been made within 90 days after the end of that period, the offeror will immediately submit a revised certificate to the Contracting Officer, in the form specified under subparagraph (c)(1) or (c)(2) of Part I of this provision, as appropriate, to verify submission of a completed Disclosure Statement.

Caution: Offerors currently required to disclose because they were awarded a CAS-covered prime contract or subcontract of $25 million or more in the current cost accounting period may not claim this exemption (4). Further, the exemption applies only in connection with proposals submitted before expiration of the 90-day period following the cost accounting period in which the monetary exemption was exceeded.

II. Cost Accounting Standards - Eligibility for Modified Contract Coverage

If the offeror is eligible to use the modified provisions of 48 CFR, Subpart 9903.201-2(b) and elects to do so, the offeror shall indicate by checking the box below. Checking the box below shall mean that the resultant contract is subject to the Disclosure and Consistency of Cost Accounting Practices clause in lieu of the Cost Accounting Standards clause.

_____ The offeror hereby claims an exemption from the Cost Accounting Standards clause under the provisions of 48 CFR, Subpart 9903.201-2(b) and certifies that the offeror is eligible for use of the Disclosure and Consistency of Cost Accounting Practices clause because during the cost accounting period immediately preceding the period in which this proposal was submitted, the offeror received less than $25 million in awards of CAS-covered prime contracts and subcontracts, or the offeror did not

receive a single CAS-covered award exceeding $1 million. The offeror further certifies that if such status changes before an award resulting from this proposal, the offeror will advise the Contracting Officer immediately.

Caution: An offeror may not claim the above eligibility for modified contract coverage if this proposal is expected to result in the award of a CAS-covered contract of $25 million or more or if, during its current cost accounting period, the offeror has been awarded a single CAS-covered prime contract or subcontract of $25 million or more.

III. Additional Cost Accounting Standards Applicable to Existing Contracts.

The offeror shall indicate below whether award of the contemplated contract would, in accordance with subparagraph (a)(3) of the Cost Accounting Standards clause, require a change in established cost accounting practices affecting existing contracts and subcontracts.

___ Yes ___ No.

K.18

DATA UNIVERSAL NUMBERING SYSTEM (DUNS)

(a) The bidder/offeror is requested to insert the DUNS number applicable to the Contractor's address shown on the solicitation form.

DUNS NO._____

(b) If the production point (point of final assembly) is other than the location entered on the solicitation form, or if additional production points are involved, enter the DUNS number applicable at each production point in the space provided below.

Item No.	Manufacturer	Production Point	DUNS.NO.

(c) If DUNS numbers have not be established for the Contractor, or the production point(s) not shown above, a number will be assigned upon request by Dun & Bradstreet, Allentown, PA. Phone (800) 234-3867.

K.19

52.215-11 AUTHORIZED NEGOTIATORS. (APR 1984)

The offeror or quoter represents that the following persons are authorized to negotiate on its behalf with

the Government in connection with this request for proposals or quotations:

Name and Title	Location	Phone
_____	_____	_____
_____	_____	_____
_____	_____	_____

By signature on the solicitation form, I hereby affirm that I am authorized, on behalf of the company, to enter into binding contractual agreements with the Government; and furthermore, that the person(s) named above [_] are, [_] are not, likewise so authorized.

K.20

FACSIMILE NUMBER

The offeror shall indicate the telephone number (if applicable) to which the Government may send written communications electronically.

I HEREBY CERTIFY THAT THE RESPONSES TO THE ABOVE REPRESENTATIONS, CERTIFICATIONS AND OTHER STATEMENTS ARE ACCURATE AND COMPLETE.

SIGNATURE:_____

TITLE:_____

DATE:_____

Next.....Previous.....Return to the Table of Contents

SECTION L

INSTRUCTIONS, CONDITIONS, AND NOTICES TO OFFERORS

L.1

FORMAT AND INSTRUCTIONS FOR PROPOSAL

General. The proposal (offer) submitted in response to this solicitation shall be formatted as follows, in separately bound volumes and submitted in the quantities specified. Offerors must include the name, title, address, and phone number of the individual responsible for inquiries to the proposal.

Volume I - Standard Form of Contract and Price Proposal

Original and Two (2) copies

Volume II - Technical and Managerial Proposal

Original and Four (4) copies

L.1.1

Cover Letter.

A cover letter may accompany the proposal. This cover letter may be used to set forth any information the offerors wishes to bring to the attention of the Library. The cover letter is not a part of the proposal.

L.1.2

The Proposal.

The proposal shall consist of the following volumes and must include all requested information. The format shall be as follows:

L.2

VOLUME I - STANDARD FORM OF CONTRACT AND PRICE PROPOSAL

This volume of the proposal shall consist of Sections A, B, C, D, E, F, G, H, I, J, and K of the solicitation document (including any amendments as submitted to the offerors).

L.2.1

Section A - Standard Form 33

Blocks 13, 14, 15, 16, and 18 of page 1 of Standard Form 33 will be completed by offerors and Block 17 shall be signed to show that the offeror has read and agrees to comply with all the conditions and instructions provided in the solicitation document.

L.2.2

Section B - Prices/Cost

In this section of the Proposal, the offeror is required to submit a unit cost for each line item and totals using the quantities as contained in Section B of the Solicitation Document (Pages B-1 through B-25 [LOT 1] and B-26 through B-35 [LOT 2]. SF 1411 is a cover sheet and for use by offerors for the submission of the Cost Proposal. The SF 1411 and Table 15-2, instructions, are included on pages L-13 - L-19. A breakdown of all unit costs shall be included as an attachment to Section B in order to establish price reasonableness or cost realism. The offeror is to submit data to support those cost factors that are appropriate for this proposal. The offer shall include, as a minimum: A breakdown of all direct costs (including direct labor, materials, etc.); indirect cost, (overhead or general and

administrative expenses [G&A]; and profit, and shall submit documentation in support of each cost element proposed based on information on prices and quantities at which the offeror has previously sold the same or similar items/services.

L.2.3

Sections C, D, E, F, G, H, I, and J

The offeror shall incorporate and return the provisions set forth in Sections C, D, E, F, G, H, I, and J of the solicitation document into Volume I of the proposal.

L.2.4

Section K - Representations, Certifications, and Other Statements of Offerors

The offeror must check or complete all applicable boxes or blocks in the paragraphs under Section K of the solicitation document and submit the full section as part of Volume I of the proposal.

L.2.5

Financial Responsibility

The offeror shall describe the size of the company and must submit information to support a determination of financial responsibility. This may be in the form of an annual report, letters of credit from a bank or other financial institution, or profit and loss statements certified by a public accountant. Equivalent information shall

be provided for all subcontractors proposed. All information submitted shall be marked confidential if applicable.

L.3

VOLUME II--TECHNICAL/MANAGERIAL PROPOSAL

SEPARATE PROPOSALS (INCLUDING BOTH COST AND TECHNICAL) MUST BE SUBMITTED FOR EACH LOT PROPOSED.

Offerors shall clearly state that the proposal submitted is in response to LOT 1 or LOT 2.

Organization of responses in Volume II shall be submitted in the order listed below. Comprehensive responses to the requirements of the Request for Proposals are necessary to evaluate the offeror's capability to meet the stated requirements and provide the deliverables described in the solicitation. Technical proposals should be practical, legible, clear, and coherent. In order that evaluation may be accomplished strictly on the merit of the material submitted, no costs shall be included in technical proposals.

General statements that the offeror can comply with the requirements will not, by themselves, be adequate. Failure to provide the requested technical information in L.3.1 - L.3.8 that follow, may be cause for rejection of the offer.

L.3.1

Section 1 - Overall Technical Approach; Proposed Methodology; Demonstrated Understanding of the Scope of Work

The offeror shall provide responses which address each of the requirements as listed in Section C. Detailed responses to each of these requirements shall provide an explanation indicating offeror's ability and proposed methodology to be utilized to meet each requirement. Responses shall not be a restatement of the requirement but shall be comprehensive, well-conceived, and include detailed approaches to accomplishing the tasks and providing the deliverables. The offeror shall include specific responses which demonstrate the capability and proposed methodology to meeting the following mandatory requirements:

SOURCE MATERIALS

LOTS 1 AND 2

- An understanding of the technical characteristics and variations of Library of Congress source materials described in this procurement; methods to be used to analyze source materials, stated in terms of the various features or characteristics that will be subject to analysis
- Understanding of the requirement for safe handling of all source materials; specific methods to be used to ensure that all source materials will be handled in accordance with the Library's requirements

IMAGING - proposed plan and methodology for production of digital images, including hardware and software, for each type of device to be used.

LOT 1

- Specific methods (i.e., special techniques, procedures, algorithms, hardware, software, etc.) to be used to produce digital images from bound volumes for each handling/size category
- Specific description of support mechanism or book cradle to be used
- Specific methods (i.e., special techniques, procedures, algorithms, hardware, software, etc.) to be used to produce digital images from unbound materials for each handling/size category
- Understanding of derivative images; specific methods (including special techniques, procedures, algorithms, hardware, software, etc.) to be used to produce derivative bitonal images and derived image segments of large pages

LOT 2

Specific methods (i.e., special techniques, procedures, algorithms, hardware, software, etc.) to be used to produce digital images from large and color bound materials for each handling/size category

Specific design of book cradle to be used

Understanding of derivative images; specific methods (including special techniques, procedures, algorithms, hardware, software, etc.) to be used to produce derivative bitonal images

LOTS 1 AND 2

- Understanding of the requirement to scan the component parts of a bound item, including the target, covers, inside pages, etc.; specific methods to be used to ensure that the scanning of all component parts will be performed correctly Understanding of cropping requirements; specific methods to be used to perform
- Understanding of digital image resolution; pixel depth; file formats and file headers; compression requirements; skewing; image orientation; specific methods to be used to ensure that images are correct
- Understanding of image types and characteristics; specific methods (including special techniques, procedures, algorithms, hardware, software, etc.) to be used to produce image types required
- Specific methods to be used to determine the need for printed halftone treatment; specific methods (i.e., special hardware, software, special techniques, procedures, algorithms, etc.) by which printed halftone treatment will be applied in the production of printed halftone illustrations and complex line art illustrations
- Specific methods to be used to determine the need for contrast stretching; specific methods by which contrast stretching will be applied

TEXT CONVERSION and SGML-ENCODING

LOT 1 only

- Understanding of the requirement to produce keyed and SGML-encoded text from image sets scanned by the contractor and/or provided by the Library; specific methods to be used to accomplish the keying and

SGML-encoding, including a detailed, step-by-step task breakdown and description of the procedures, techniques, and staffing involved in the process, from the time images are received by the contractor to the time final SGML-encoded text is delivered to the Library

FILENAMES and DELIVERY DIRECTORIES

LOTS 1 AND 2

- Understanding of special directory/file naming systems and feature recognition; specific approach and methods to be used to accomplish both in accordance with the Library's specifications

RELATED SERVICES

LOTS 1 AND 2

- Understanding of related services and activities

--specific methods to be used to determine the need for photocopies of source materials
--specific methods to be used to produce printed copies of scanned images (i.e., special hardware, software, special techniques, procedures, algorithms, etc.)
--specific approach to handling programming and processing requirements

L.3.2

Section 2 - Previously Demonstrated Production Experience and Successful Past Performance

The offeror shall provide project descriptions for a minimum of three and a maximum of 5 other similar or comparable efforts performed during the past five years which demonstrate successful performance and the ability to organize and administer these projects, as well as, the ability to produce similar types of image sets (Lot 1 and Lot 2) and SGML-encoded texts (Lot 1 only). Description must include names, titles, and phone numbers of project reference contacts, as well as approximate project dollar amount, level of staffing, and duration. Relevant information to substantiate and or document past performance may include: records of conforming to contract requirements and to standards of good workmanship; records of forecasting and controlling costs; adherence to contract schedules, including the administrative aspects of performance; history of reasonable and cooperative behavior and commitment to customer satisfaction; and business-like concern for the interest of the customer. The description should also indicate if the project was performed by any of the personnel proposed for this project, and the role and time commitment of the personnel on the referenced project. The description shall also state why the project is considered relevant.

In addition to the above, the offeror shall provide, for each relevant project cited, specific elements such as the following:

LOT 1 AND LOT 2 -- IMAGING

Types and number of images produced, equipment used, handling techniques, types of source documents

handled, accuracy requirements/quality control, etc.

LOT 1 only -- TEXT CONVERSION

- a description of the nature, type, age, content and targeted usage of source materials for which keying and SGML-encoding was performed
- total number of pages of source material converted to keyed and SGML-encoded text
- total number of kilocharacters of source material converted to keyed and SGML-encoded text
- percentage of project activity related to keying and SGML-encoding
- copy of the project DTD in hard-copy form* representative sample of keyed and tagged text not to exceed 20 pages*
- required accuracy levels for keying and SGML-encoding
- actions taken to ensure that the accuracy levels were attained
- nature and type of error diagnostics performed and error diagnostic reports produced
- representative samples of error diagnostic reports provided and the purpose of each
- types of relevant software employed and the purpose for its use; if commercially available software provide name, version, and manufacturer; if custom software, provide details including origin and ownership of software and the functions performed by the software

*If proprietary restrictions prohibit including a printed copy of the project DTD and/or the sample of keyed and tagged text, the offeror shall clearly state that this is the case. The offeror shall then provide a detailed description of the nature and functionality of the DTD and a description of the keyed and tagged text.

L.3.3

Section 3 - Quality Control

The offeror shall submit a detailed Quality Assurance Plan. In the plan, the offeror shall describe the methods and staffing to be used to review the digital images, texts, and file/directory names before delivery to the Library to ensure that the delivery and accuracy requirements are met. The Plan shall address quality control procedures for handling reworked materials of unacceptable images and text.

LOT 1 AND LOT 2

The Plan shall demonstrate the offeror's understanding of the accuracy requirements for imaging , and shall describe specific methods and approach to be used to accomplish these requirements. Samples of logs and other documents relevant to the quality assurance procedure shall be included.

LOT 1only

The Plan shall demonstrate the offeror's understanding of the accuracy requirements for encoded text files, including the requirement for customized error diagnostic software and the creation of associated files; specific methods to be used to accomplish these requirements, including a detailed, step-by-step task breakdown and description of the procedures, techniques, and staffing involved in the process. Samples of reports and other documents relevant to the quality assurance procedure shall be included.

L.3.4

Section 4 - Capability and Experience of Key Personnel

For purposes of this contract, key personnel requirements as indicated in C.14.14 are defined as follows:

LOT 1 AND LOT 2

project manager and designated alternate
digital scanning personnel
quality assurance inspector(s)
imaging engineer(s) or scientist(s)

LOT 1 only -

SGML expert-specialist(s) (Lot 1)

Offeror shall identify proposed key personnel and shall provide detailed resumes which indicate particular expertise and experience in areas relevant to work of the project. For each proposed team member, offeror must state the level of skill, proposed role on project, employment status, and time commitment to the project. If proposed project staff are not currently employed by the offeror, a letter of intent from those individuals is required to be submitted with the proposal (See H.7).

L.3.5

Section 5 - Project Management and Corporate Support Capability

The offeror shall submit a plan for managing and staffing all phases of this effort as described in Section C. The offeror shall provide an organization chart which illustrates the relationships of the proposed team members for the purposes of this project and which illustrates how the proposed team is integrated into the offeror's organization.

The project management plan shall demonstrate an understanding of pace of work, production levels and requirements, delivery schedules, and delivery requirements for images (Lot 1 and Lot 2) and for converted and marked-up text (Lot 1 only), and shall describe the approach and methods to be used to accomplish them including sample or mock logs, delivery documents, tracking mechanisms, etc.

The project plan shall indicate the methods and staffing required to accommodate varying levels of effort as follows:

LOT 1 **LOT 2**

Image Production Levels	5,000 images per week 10,000 images per week 15,000 images per week	100 - 500 images per week (not applicable)
Text Conversion Production Levels	1,000 pages per week 5,000 pages per week 10,000 pages per week	

A summary description of the capabilities and adequacy of corporate resources and staff to provide technical support and backup to the proposed project team shall be provided.

L.3.6

Section 6 - Facilities and Equipment

Offerors shall describe in detail their facilities/off-site work area and location, equipment to be used, and methods for safeguarding materials as described in Section C. In addition, all proposed equipment shall include a specification sheet with photographic illustrations or drawings. For work to be performed at the Library, offerors shall describe the work site, amount of space and other physical requirements for onsite scanning and for safeguarding materials as described in Section C, along with an explanation of applicability to this project.

L.3.7

Section 7 - Use of Subcontractors

Offerors must identify all subcontractors and their role and responsibility with the project. Similar information required to determine responsibility and capability of the prime contractor must be submitted for all proposed subcontractors.

L.3.8

Section 8 - Questions/Problems

Offeror is to provide a list of questions and/or problems which must be addressed prior to contract award and beginning of performance. If the offeror takes exception to a particular task or condition, it must be clearly identified in this section.

L.4

SAMPLE AND BENCHMARK TESTS

After the initial technical evaluation, and as indicated in Section M.2, the Library will require a demonstration of technical competence from those offerors determined to be in the competitive range (technical, price, and other factors considered). This technical demonstration will consist of the production and delivery of digital images.

For both Lot 1 and Lot 2, the offeror will be required to produce a series of images including bitonal, grayscale and color.

L.4.1

Government Furnished Test Materials

To those offerors in the competitive range for both Lot 1 and Lot 2, the Library will supply at least one page for each of the following categories:

- printed halftone book illustration to be scanned as bitonal with halftone treatment
- 8x10 print to be scanned as grayscale with contrast stretching treatment
- 8x10 color print of a manuscript page to be scanned as color
- instructions regarding level of resolution and filenaming for each image

L.4.2

Demonstration Requirements

The offeror shall be required to prepare at least one bitonal (with halftone treatment) image, one grayscale image, and one color image to be produced using each hardware and software configuration proposed for the image types required. For example, if the contractor proposes two different hardware and software configurations, one for small

bound materials and one for unbound materials of any size, the contractor would be required to produce a sample grayscale image (of the page provided by the Library) on each of the two configurations. If only one hardware/software configuration is proposed to produce color images for all size and handling categories requiring color, then only one image is required to be produced.

In addition to the pages provided by the Library, a bitonal image of the IEEE Std 167A-1987 target shall be scanned using each of the hardware/software configurations proposed.

The digital images shall be submitted on a write-once CD-ROM or a set of floppy disks. In addition to the images, the offeror shall provide a description of the capture hardware and software configurations used, and identify the hardware/software configuration used to produce each image. The offeror shall also supply any written explanations needed for the Library to understand the results.

From the time the materials are delivered to the offeror, the offeror shall have no less than two (2) weeks and not more than three (3) weeks to complete the scanning test.

L.5

PREPROPOSAL CONFERENCE

A preproposal conference will be held at the Library of Congress, at 10:00 a.m., Wednesday, June 5, 1996.

Should any offeror have questions concerning any aspect of the solicitation, those questions must be submitted, in writing, to the Contracting Officer in advance of the meeting if possible. The questions should identify the specific area of the solicitation for which clarification is desired. All questions and answers will be made available, in writing within a reasonable time after the conference. Questions will not be identified as to source. Offerors who plan to have representation at this conference are requested to call Morgan Day at (202) 707-0431 to affirm their intention to attend, their company name, and the number of representatives prior to the date of the conference to ensure adequate seating space is available.

L.6

52.252-1 SOLICITATION PROVISIONS INCORPORATED BY REFERENCE (JUN 1988)

This solicitation incorporates one or more solicitation provisions by reference, with the same force and effect as if they were given in full text. Upon request, the Contracting Officer will make their full text available.

52.215-05 SOLICITATION DEFINITIONS JUL 1987
52.215-07 UNNECESSARILY ELABORATE PROPOSALS APR 1984
52.215-08 AMENDMENTS TO SOLICITATIONS DEC 1989
52.215-09 SUBMISSION OF OFFERS JUL 1995
52.215-10 LATE SUBMISSIONS, MODIFICATIONS, JUL 1995 AND WITHDRAWALS OF PROPOSALS
52.215-12 RESTRICTION ON DISCLOSURE AND USE OF DATA APR 1984
52.215-13 PREPARATION OF OFFERS APR 1984
52.215-14 EXPLANATION TO PROSPECTIVE OFFERORS APR 1984
52.215-15 FAILURE TO SUBMIT OFFER JUL 1995

L.7
52.215-16 CONTRACT AWARD. (OCT 1995) -- ALTERNATE I (OCT 1995)

(a) The Government will award a contract resulting from this solicitation to the responsible offeror whose offer conforming to the solicitation will be most advantageous to the Government, cost or price and other factors, specified elsewhere in this solicitation, considered.

(b) The Government may (1) reject any or all offers if such action is in the public interest, (2) accept other than the lowest offer, and (3) waive informalities and minor irregularities in offers received.

(c) The Government intends to evaluate proposals and award a contract after conducting written or oral discussions with all responsible offerors whose proposals have been determined to be within the competitive range. However, each initial offer should contain the offeror's best terms from a cost or price and technical standpoint.

(d) The Government may accept any item or combination of items, unless doing so is precluded by a restrictive limitation in the solicitation or offer.

(e) A written award or acceptance of offer mailed or otherwise furnished to the successful offeror within the time for acceptance specified in the offer shall result in a binding contract without further action by either party. Before the offer's specified expiration time, the Government may accept an offer (or part of an offer, as provided in paragraph (d) above), whether or not there are negotiations after its receipt, unless a written notice of withdrawal is received before award. Negotiations conducted after receipt of an offer do not constitute a rejection or counteroffer by the Government.

(f) Neither financial data submitted with an offer, nor representations concerning facilities or

financing, will form a part of the resulting contract. However, if the resulting contract contains a clause providing for price reduction for defective cost or pricing data, the contract price will be subject to reduction if cost or pricing data furnished is incomplete, inaccurate, or not current.

(g) The Government may determine that an offer is unacceptable if the prices proposed are materially unbalanced between line items or subline items. An offer is materially unbalanced when it is based on prices significantly less than cost for some work and prices which are significantly overstated in relation to cost for other work, and if there is a reasonable doubt that the offer will result in the lowest overall cost to the Government, even though it may be the low evaluated offer, or it is so unbalanced as to be tantamount to allowing an advance payment.

(h) The Government may disclose the following information in post-award debriefings to other offerors: (1) the overall evaluated cost or price and technical rating of the successful offeror; (2) the overall ranking of all offerors, when any ranking was developed by the agency during source selection; (3) a summary of the rationale for award; and (4) for acquisitions of commercial end items, the make and model of the item to be delivered by the successful offeror.

L.8

52.216-1 TYPE OF CONTRACT (APR 1984)

The Government contemplates award of an indefinite quantity firm-fixed unit price contract resulting from this solicitation.

L.9

52.215-41 REQUIREMENTS FOR COST OR PRICING DATA OR INFORMATION OTHER THAN COST OR PRICING DATA. (OCT 1995)

(a) Exceptions from cost or pricing data.

(1) In lieu of submitting cost or pricing data, offerors may submit a written request for exception by submitting the information described in the following subparagraphs. The Contracting Officer may require additional supporting information, but only to the extent necessary to determine whether an exception should be granted, and whether the price is fair and reasonable.

(i) Information relative to an exception granted for prior or repetitive acquisitions.

(ii) Catalog price information as follows:

(A) Attach a copy of or identify the catalog and its date, or the appropriate pages for the offered items, or a statement that the catalog is on file in the buying office to which this proposal is being made.

(B) Provide a copy or describe current discount policies and price lists (published or unpublished), e.g., wholesale, original equipment manufacturer, and reseller.

(C) Additionally, for each catalog item that exceeds [*] (extended value not unit price), provide evidence of substantial sales to the general public. This may include sales order, contract, shipment, invoice, actual

recorded sales or other records that are verifiable. In addition, if the basis of the price proposal is sales of essentially the same commercial item by affiliates, other manufacturers or vendors, those sales may be included. The offeror shall explain the basis of each offered price and its relationship to the established catalog price. When substantial general public sales have also been made at prices other than catalog or price list prices, the offeror shall indicate how the proposed price relates to the price of such recent sales in quantities similar to the proposed quantities.

*Insert dollar amount for sampling (see 15.804-1(c)(1))

(iii) Market price information. Include the source and date or period of the market quotation or other basis for market price, the base amount, and applicable discounts. The nature of the market should be described. The supply or service being purchased should be the same as or similar to the market price supply or service. Data supporting substantial sales to the general public is also required.

(iv) Identification of the law or regulation establishing the price offered. If the price is controlled under law by periodic rulings, reviews, or similar actions of a governmental body, attach a copy of the controlling document, unless it was previously submitted to the contracting office.

(v) For a commercial item exception, information on prices at which the same item or similar items have been sold in the commercial market.

(2) The offeror grants the Contracting Officer or an authorized representative the right to examine, at any time before award, books, records, documents, or other directly pertinent records to verify any request for an exception under this provision, and the reasonableness of price. Access does not extend to cost or profit information or other data relevant solely to the offeror's determination of the prices to be offered in the catalog or marketplace.

(b) Requirements for cost or pricing data. If the offeror is not granted an exception from the requirement to submit cost or pricing data, the following applies:

(1) The offeror shall submit cost or pricing data on Standard Form (SF) 1411, Contract Pricing Proposal Cover Sheet (Cost or Pricing Data Required), with supporting attachments prepared in accordance with Table 15-2 of FAR 15.804-6(b)(2).

(2) As soon as practicable after agreement on price, but before contract award (except for unpriced actions such as letter contracts), the offeror shall submit a Certificate of Current Cost or Pricing Data, as prescribed by FAR 15.804-4.

(c) By submitting information to qualify for an exception, an offeror is not representing that this is the only exception that may apply.

L.10

52.233-2 SERVICE OF PROTEST (OCT 1995)

(a) Protests, as defined in section 33.101 of the Federal Acquisition Regulation, that are filed directly with an agency, and copies of any protests that are filed with the General Accounting Office (GAO) or the General Services Administration Board of Contract Appeals (GSBCA), shall be served on the Contracting Officer (addressed as follows) by obtaining written and dated acknowledgment of receipt from:

Helen S. Mathura
Library of Congress
Contracts and Logistics
1701 Brightseat Road

Landover, MD 20785-3799

(b) The copy of any protest shall be received in the office designated above on the same day a protest is filed with the GSBCA or within one day of filing a protest with the GAO.

(c) In this procurement, you may not protest to the GSBCA because of the nature of the supplies or services being procured.

TABLE 15-2 INSTRUCTIONS FOR SUBMISSION OF A CONTRACT PRICING PROPOSAL

WHEN COST OR PRICING DATA ARE REQUIRED

The SF 1411 provides a cover sheet for use by offerors to submit to the Government a pricing proposal of estimated and/or actual costs only when cost or pricing data are required.

1. The pricing proposal shall be segregated by contract line item with sufficient detail to permit cost analysis. Attach cost-element breakdowns, using the applicable formats prescribed in Item 8A, B, or C of this section, for each proposed line item. These breakdowns must conform to the instructions in the solicitation and any specific requirements established by the contracting officer. Furnish supporting breakdowns for each cost element, consistent with the offeror's cost accounting system.

When more than one contract line item is proposed, summary total amounts covering all line items must be furnished for each cost element. If agreement has been reached with Government representatives on use of forward pricing rates/factors, identify the agreement, include a copy, and describe its nature. Depending on offeror's system, breakdowns shall be provided for the following basic elements of cost, as applicable:

Materials - Provide a consolidated priced summary of individual material quantities included in the various tasks, orders, or contract line items being proposed and the basis for pricing (vendor quotes, invoice prices, etc.). Include raw materials, parts, components, assemblies, and services to be produced or performed by others. For all items proposed, identify the item and show the source, quantity, and price.

Competitive Methods - For those acquisitions (e.g. subcontracts, purchase orders, material orders, etc.) exceeding the pertinent threshold set forth at 15.804-2(a)(1) priced on a competitive basis, also provide data showing degree of competition, and the basis for establishing the source and reasonableness of price. For interorganizational transfers priced at other than cost of the comparable competitive commercial work of the division, subsidiary, or affiliate of the contractor, explain the pricing method (see 31.205-26(e)).

Established Catalog or Market Prices or Prices Set by Law or Regulation or Commercial Item Not Covered By Another Exception--When an exception from the requirement to submit cost or pricing data is requested, whether the item was produced by others or by the offeror, provide justification for the exception as required by 15.804-1(d).

Noncompetitive Methods - For those acquisitions (e.g. subcontracts, purchase orders, material orders, etc.) exceeding the pertinent threshold set forth at 15.804-2(a)(1) priced on a noncompetitive basis, also provide data showing the basis for establishing source and reasonableness of price. For standard commercial items fabricated by the offeror that are generally stocked in inventory, provide a separate cost breakdown if priced based on cost.

For interorganizational transfers priced at cost, provide a separate breakdown of cost by elements. As required by 15.806-2(a), provide a copy of cost or pricing data submitted by the prospective source in support of each subcontract, or purchase order that is either: (i) $1,000,000 or more, or (ii) both more than the pertinent threshold set forth in 15.804-2(a)(1)(iii) and (iv) and more than 10 percent of the prime contractor's proposed price. The contracting officer may require submission of cost or pricing data in support of proposals in lower amounts. Submit the results of the analysis of the prospective source's proposal as required by 15.806. When the submission of a prospective source's cost or pricing data is required as described above, it shall be included as part of the offeror's initial pricing proposal.

Direct Labor - Provide a time-phased (e.g., monthly, quarterly, etc.) breakdown of labor hours, rates, and cost by appropriate category, and furnish bases for estimates.

Indirect Costs - Indicate how offeror has computed and applied offeror's indirect costs, including cost breakdowns, and showing trends and budgetary data, to provide a basis for evaluating the reasonableness of proposed rates. Indicate the rates used and provide an appropriate explanation.

Other Costs - List all other costs not otherwise included in the categories described above (e.g., special tooling, travel, computer and consultant services, preservation, packaging and packing, spoilage and rework, and Federal excise tax on finished articles) and provide bases for pricing.

Royalties - If more than $250, provide the following information on a separate page for each separate royalty or license fee: name and address of licensor; date of license agreement; patent numbers, patent application serial numbers, or other basis on which the royalty is payable; brief description (including any part or model numbers of each contract item or component on which the royalty is payable); percentage or dollar rate of royalty per unit; unit price of contract item; number of units; and total dollar amount of royalties. In addition, if specifically requested by the contracting officer, provide a copy of the current license agreement and identification of applicable claims of specific patents. (See FAR 27.204 and 31.205-37).

Facilities Capital Cost of Money - When the offeror elects to claim facilities capital cost of money as an allowable cost, the offeror must submit Form CASB-CMF and show the calculation of the proposed amount (see FAR 31.205-10).

2. As part of the specific information required, the offeror must submit with offeror's proposal, and clearly identify as such, cost or pricing data (that is, data that are verifiable and factual and otherwise as defined at FAR 15.801). In addition, submit with offeror's proposal any information reasonably required to explain offeror's estimating process, including -

a. The judgmental factors applied and the mathematical or other methods used in the estimate, including those used in projecting from known data; and

b. The nature and amount of any contingencies included in the proposed price.

3. Whenever the offeror has incurred costs for work performed before submission of proposal, those costs must be identified in the offeror's cost/price proposal.

4. There is a clear distinction between submitting cost or pricing data and merely making available books, records, and other documents without identification. The requirement for submission of cost or pricing data is met when all accurate cost or pricing data reasonably available to the offeror have been submitted, either actually or by specific identification, to the contracting officer or an authorized representative. As later information comes into the offeror's possession, it should be promptly submitted to the contracting officer in a manner that clearly shows how the information relates to the offeror's price proposal. The requirement for submission of cost or pricing data continues up to the time of agreement on price, or another date agreed upon between the parties if applicable.

5. In submitting offeror's proposal, offeror must include an index, appropriately referenced, of all the cost or pricing data and information accompanying or identified in the proposal. In addition, any future additions and/or revisions, up to the date of agreement on price, must be annotated on a supplemental index.

6. By submitting offeror's proposal, the offeror, if selected for negotiation, grants the contracting officer or an authorized representative the right to examine, at any time before award, those books, records, documents, and other types of factual information, regardless of form or whether such supporting information is specifically referenced or included in the proposal as the basis for pricing, that will permit an adequate evaluation of the proposed price.

7. As soon as practicable after final agreement on price, but before the award resulting from the proposal, the offeror shall, under the conditions stated in FAR 15.804-4, submit a Certificate of Current Cost or Pricing Data.

8. HEADINGS FOR SUBMISSION OF LINE-ITEM SUMMARIES:

A. New Contracts (including Letter contracts).

COST ELEMENTS (1)	PROPOSED CONTRACT ESTIMATE-TOTAL COST (2)	PROPOSED CONTRACT ESTIMATE-UNIT COST (3)	REFERENCE (4)

Under Column (1) - Enter appropriate cost elements.

Under Column (2) - Enter those necessary and reasonable costs that in offeror's judgment will properly be incurred in efficient contract performance. When any of the costs in this column have already been incurred (e.g., under a letter contract or unpriced order), describe them on an attached supporting schedule. When preproduction or startup costs are significant, or when specifically requested to do so by the contracting officer, provide a full identification and explanation of them.

Under Column (3) - Optional, unless required by the contracting officer.

Under Column (4) - Identify the attachment in which the information supporting the specific cost element may be found. Attach separate pages as necessary. B. Change Orders, Modifications, and Claims.

COST ELEMENTS	ESTIMATED COST OF ALL WORK DELETED	COST OF DELETED WORK PERFORMED	NET COST TO BE DELETED	COST OF WORK ADDED	NET COST OF CHANGE	REFERENCE
(1)	(2)	(3)	(4)	(5)	(6)	(7)

Under Column (1) - Enter appropriate cost elements.

Under Column (2)--Include the current estimates of what the cost would have been to complete the deleted work not yet performed (not the original proposal estimates), and the cost of deleted work already performed.

Under Column (3) - Include the incurred cost of deleted work already performed, actually computed if possible, or estimated in the contractor's accounting records. Attach a detailed inventory of work, materials, parts, components, and hardware already purchased, manufactured, or performed and deleted by the change, indicating the cost and proposed disposition of each line item. Also, if offeror desires to retain these items or any portion of them, indicate the amount offered for them.

Under Column (4) - Enter the net cost to be deleted which is the estimated cost of all deleted work less the cost of deleted work already performed. Column (2) less Column (3) = Column (4).

Under Column (5) - Enter the offeror's estimate for cost of work added by the change. When nonrecurring costs are significant, or when specifically requested to do so by the contracting officer, provide a full identification and explanation of them. When any of the costs in this column have already been incurred, describe them on an attached supporting schedule.

Under Column (6) - Enter the net cost of change which is the cost of work added, less the net cost to be deleted. When this result is negative, place the amount in parentheses. Column (4) less Column (5) = Column (6).

Under Column (7) - Identify the attachment in which the information supporting the specific cost element may be found. Attach separate pages as necessary. C. Price Revision/Redetermination.

CUTOFF DATE	NUMBER OF UNITS COMPLETED	NUMBER OF UNITS TO BE COMPLETED	CONTRACT AMOUNT	REDETERMINATION PROPOSAL AMOUNT	DIFFERENCE
(1)	(2)	(3)	(4)	(5)	(6)

COST ELEMENTS	INCURRED COST PREPRO-DUCTION UNITS	INCURRED COST-COMPLEMENTED PROCESS	INCURRED COST-WORK IN	TOTAL INCURRED COST	EST. COST TO COMPLETE	EST. TOTAL COST	REFERENCE
(7)	(8)	(9)	(10)	(11)	(12)	(13)	(14)

Under Column (1) - Enter the cutoff date required by the contract, if applicable.

Under Column (2) - Enter the number of units completed during the period for which experienced costs of production are being submitted.

Under Column (3) - Enter the number of units remaining to be completed under the contract. Under Column (4) - Enter the cumulative contract amount.

Under Column (5) - Enter the offeror's redetermination proposal amount.

Under Column (6) - Enter the difference between the contract amount and the redetermination proposal amount. When this result is negative, place the amount in parentheses. Column (4) less Column (5) = Column (6).

Under Column (7) - Enter appropriate cost elements. When residual inventory exists, the final costs established under fixed-price-incentive and fixed-price-redeterminable arrangements should be net of the fair market value of such inventory. In support of subcontract costs, submit a listing of all subcontracts subject to repricing action, annotated as to their status.

Under Column (8) - Enter all costs incurred under the contract before starting production and other nonrecurring costs (usually referred to as startup costs) from offeror's books and records as of the cutoff date. These include such costs as preproduction engineering, special plant rearrangement, training program, and any identifiable nonrecurring costs such as initial rework, spoilage, pilot runs, etc. In the event the amounts are not segregated in or otherwise available from offeror's records, enter in this column offeror's best estimates. Explain the basis for each estimate and how the costs are charged on offeror's accounting records (e.g., included in production costs as direct engineering labor, charged to manufacturing overhead, etc.). Also show how the costs would be allocated to the units at their various stages of contract completion.

Under Columns (9) and (10) - Enter in Column (9) the production costs from offeror's books and records (exclusive of preproduction costs reported in Column (8)) of the units completed as of the cutoff date. Enter in Column (10) the costs of work in process as determined from offeror's records or inventories at the cutoff date. When the amounts for work in process are not available in contractor's records but reliable estimates for them can be made, enter the estimated amounts in Column (10) and enter in Column (9) the differences between the total incurred costs (exclusive of preproduction costs) as of the cutoff date and these estimates. Explain the basis for the estimates, including identification of any provision for experienced or anticipated allowances, such as shrinkage, rework, design changes, etc. Furnish experienced unit or lot costs (or labor hours) from inception of contract to the cutoff date, improvement curves, and any other available production cost history pertaining to the

item(s) to which offeror's proposal relates.

Under Column (11) - Enter total incurred costs (Total of Columns (8), (9), and (10)).

Under Column (12) - Enter those necessary and reasonable costs that in contractor's judgment will properly be incurred in completing the remaining work to be performed under the contract with respect to the item(s) to which contractor's proposal relates.

Under Column (13) - Enter total estimated cost (Total of Columns (11) and (12)).

Under Column (14) - Identify the attachment in which the information supporting the specific cost element may be found. Attach separate pages as necessary.

Next.....Previous.....Return to the Table of Contents

SECTION M

EVALUATION FACTOR FOR AWARD

M.1

EVALUATION CRITERIA

M.1.1

Contractor selection will be based on evaluation of proposals in accordance with the responses received to the criteria outlined in Section L, Instructions, Conditions, and Notices to Offerors and the Schedule of Prices. Award will be made to that offeror whose combination of technical and price proposals represents the best value to the Government and is most advantageous, price and other factors considered, and which is within the available Library of Congress resources.

M.1.2

The Library of Congress also reserves the right to reject any or all proposals received and/or request clarification or modification of proposals. The Library reserves the right to determine a competitive range for negotiation based upon the technical and cost acceptability of proposals. In addition, the Library reserves the right to award a contract without discussions.

M.1.3

Cost evaluation will include an analysis of the total cost and cost elements (if applicable) to perform the required work. The total costs supplied by the offeror shall be submitted on a copy of Section B in the spaces provided and shall constitute the total firm-fixed unit price for that service or deliverable.

M.1.4

Proposals that are unrealistic in terms of technical commitment or unreasonably low or high in cost or price will be deemed reflective of an inherent lack of technical competence or indicative of failure to comprehend the complexity and risk involved in the contract requirements and may be grounds for rejection of the proposal.

M.2

EVALUATION FACTORS

Technical proposals will be initially evaluated with respect to six (6) major factors for

determination of the competitive range. Technical factors are listed in descending order of importance. The technical proposal is worth more than the cost proposal; when technical proposals are relatively equal in technical merit, cost will increase in importance.

M.2.1

Technical Factors

Factor 1 Overall technical approach; proposed methodology; demonstrated understanding of the scope of work and the requirements (L.3.1)
Factor 2 Previous demonstrated production experience and past performance (L.3.2)
Factor 3 Quality Control (L.3.3)
Factor 4 Capability and Experience of Key Personnel (L.3.4)
Factor 5 Project Management and Corporate Support Capability (L.3.5)
Factor 6 Facilities and Equipment (L.3.6)

M.2.2

Sample Digital Images and Benchmark Tests

Those offerors determined to be in the competitive range (technical, price, and other factors considered) shall be required to provide sample digital images as indicated below.

The sample images for both Lot 1 and Lot 2 will be evaluated on a pass/fail basis in terms of the following considerations or features:

- **File type/format and header.** Specifications will be sent with the source documents. TIFF header and tag elements must meet specifications; to be checked using TIFFINFO or similar shareware header-reading software. JPEG files will be checked using in JPEGINFO software; header must include JFIF file format indicator. Pixel depth will be checked against file format specifications in Section C.
- **Compression.** Depending upon the file type and compression type, the image files must open and/or decompress in two different IBM-compatible computers, using any of the following software: PhotoShop (JPEG only), LView Pro (JPEG only), PhotoStyler (JPEG), View Director (TIFF only), HiJaak Pro (all files) and DocuView (all files). Compression will be evaluated based on specifications in Section C.
- **Image quality**. Images will be evaluated according to acceptance criteria included in Section C and Section E, including:

    - capture of page content
    - page orientation
    - legibility

- clarity
- legibility of hardcopy printouts

- Treatment of printed halftones. Images will be evaluated according to specifications in Section C.
- Application of gamma correction/contrast stretching. Images will be evaluated according to specifications in Section C.
- Cropping. Images will be evaluated according to guidelines outlined in Section C.

M.2.3

Cost

Reasonableness of cost.

M.3

52.217-5 EVALUATION OF OPTIONS (JUL 1990)

Except when it is determined in accordance with FAR 17.206(b) not to be in the Government's best interests, the Government will evaluate offers for award purposes by adding the total price for all options to the total price for the basic requirement. Evaluation of options will not obligate the Government to exercise the options(s).

Previous.....Return to the Table of Contents

The Library of Congress

Requests for Proposals

Table of Contents

for Section J

SECTION	TITLE		PAGE
J	ATTACHMENTS		J2-J64
J	ATTACHMENT 1	Background Information From An Investigation of Scanning Devices	J-2 - J-3
J	ATTACHMENT 2	About Research Use of Library of Congress Image collections	J-4 - J-5
J	ATTACHMENT 3	Illustration and Examples of Materials To Be Digitized	J-6 - J-23
J	ATTACHMENT 4	Filenames and Delivery Directories	J-24 - J-35
J	ATTACHMENT 5	TIFF Image File Header Information	J-36
J	ATTACHMENT 6	Historical Collections - Document Type Definition	J-37 - J-49
J	ATTACHMENT 7	Keying Instructions	J-50 - J-54
J	ATTACHMENT 8	Sample Associated Files for SGML-Encoded Texts	J-55 - J-58
J	ATTACHMENT 9	Information To Be Included In Workflow Tracking System	J-59 - J-61
J	ATTACHMENT 10	Book Handling Considerations	J-62 - J-64

Return to Table of Contents